Service Manual

Radio Cassette

RS-4360FT

Portable Cassette Recorder with 5-Band Radio (FM/MW/SW1/SW2/SW3)

SPECIFICATIONS

POWER REQUIREMENT:	AC: 90–109/110–125/200–219/220–250V, 50/60 Hz DC: 12V (eight UM-1, R-20 size dry batteries, or a car or boat battery through an adaptor)
POWER CONSUMPTIONS:	30 W
POWER OUTPUT:	11 W (5.5 W × 2)...80% modulation
FREQUENCY RESPONSE:	30–14,000 Hz
RECORDING SYSTEM:	AC bias (50 kHz), AC erase
TAPE SPEED:	4.8 cm/s ($1\frac{7}{8}$ ips)
WOW AND FLUTTER:	0.15% (WRMS)
PROGRAM TIME:	1 hour with C-60 cassette tape
FAST-FORWARD AND REWIND TIME:	105 seconds with C-60 cassette tape
TRACK SYSTEM:	4-track stereo recording and playback
SOUND MONITOR:	Variable
INPUT:	MIC: sensitivity 0.3 mV/applicable microphone impedance 200–600Ω LINE IN: 300 mV/50kΩ PHONO IN: 3 mV/55kΩ DC IN: 12V
OUTPUT:	LINE OUT: 350 mV/10kΩ EXT. SP: 4Ω HEADPHONE: 8Ω REMOTE: for start and stop at hand
SPEAKER:	Woofer: 16 cm ($6\frac{1}{2}$") PM dynamic Tweeter: 3 cm ($1\frac{1}{4}$") PM dynamic FM: 87.5–108 MHz MW: 520–1610 kHz SW1: 1.6–4.5 kHz SW2: 4.5–12 MHz SW3: 12–28 MHz
DIMENSIONS:	56.4 cm(W) × 32.6 cm(H) × 18.5 cm(D) $22\frac{1}{4}$"(W) × $12\frac{7}{8}$"(H) × $7\frac{5}{16}$"(D)
WEIGHT:	11.2 kg ($24\frac{5}{8}$ lbs)

Specifications are subject to change without notice.

National Panasonic

Matsushita Electric Trading Co., Ltd.
P.O. Box 288, Central Osaka, Japan

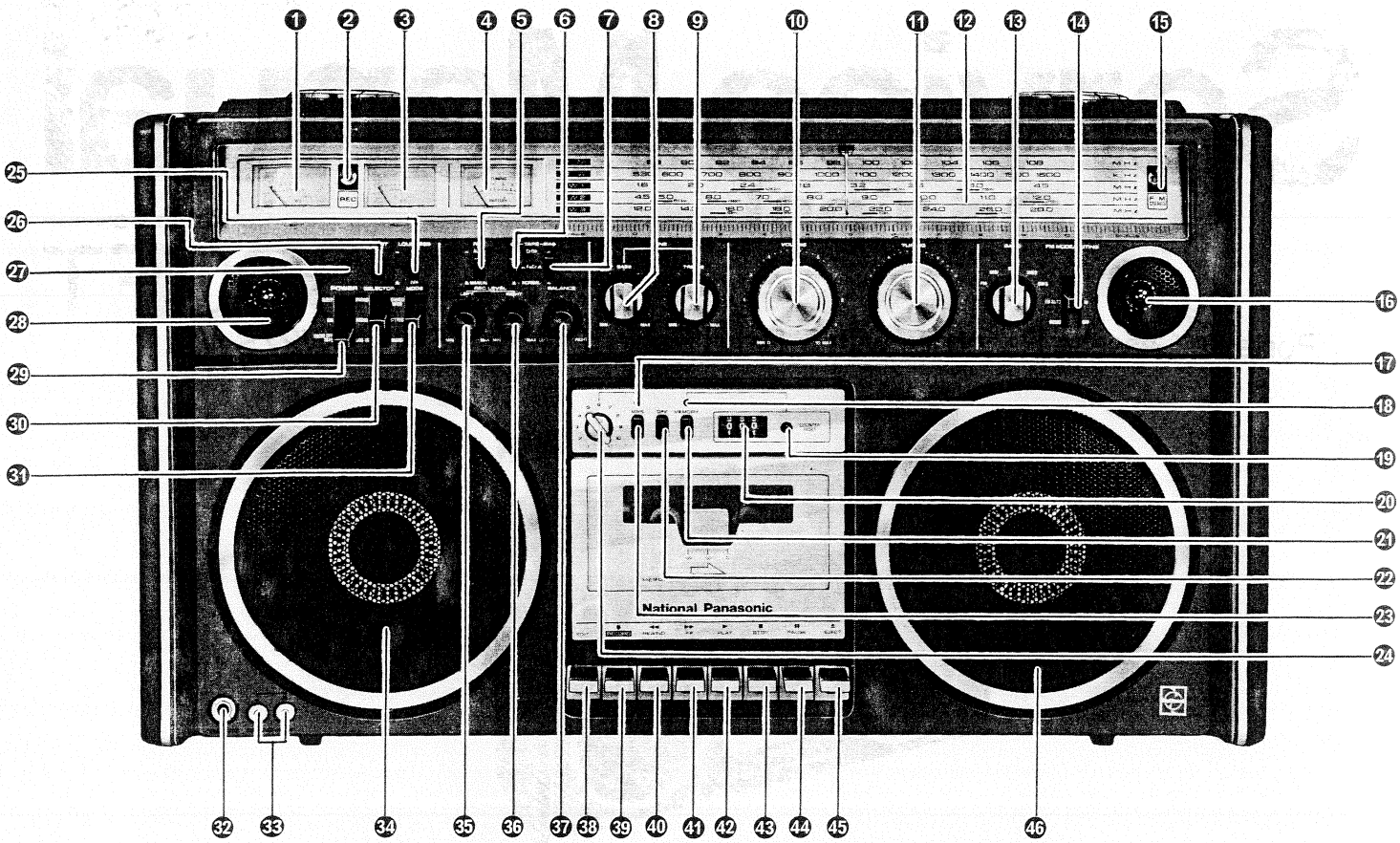
National Panasonic

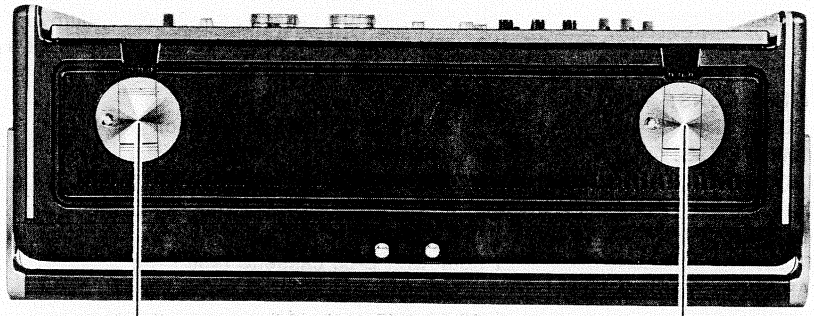

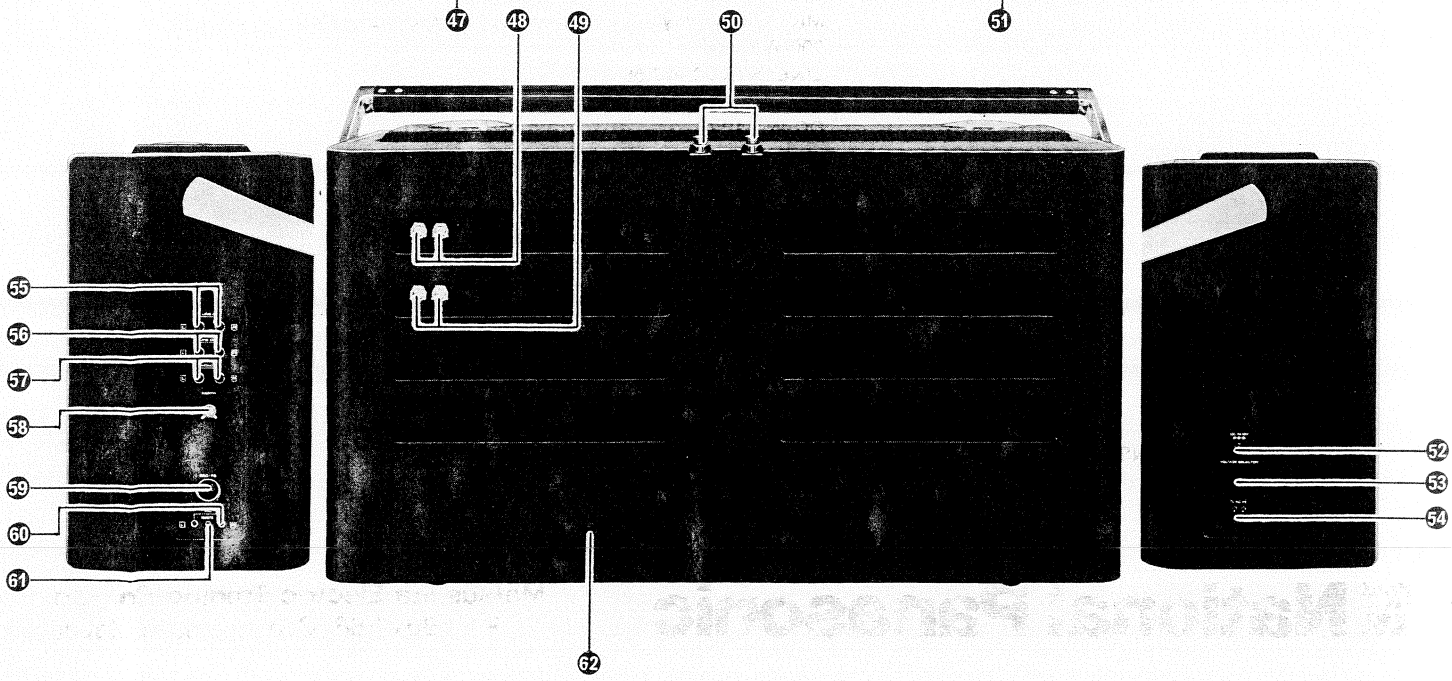

CONTROLS AND FUNCTIONS

❶❸ **VU Meters** (LEFT/RIGHT)

❷ **Recording Indicator** (REC)

❹ **Tuning/Battery Indicator** (TUNING/BATTERY)

❺ **Recording Mode Selector** (REC)

❻ **Equalization** (EQ) **and** ❼ **Bias** (BIAS) **Switches**

❽ **Bass Control** (BASS)

❾ **Treble Control** (TREBLE)

❿ **Volume Control** (VOLUME)

⓫ **Tuning Control** (TUNING)

⓬ **Tuning Dial**

⓭ **Band Selector** (BAND)

⓮ **FM Mode/Muting Switch** (FM MODE/MUTING)

⓯ **FM-Stereo Indicator** (FM STEREO)

⓰㉘ **Tweeter Speakers**

⓱ **Memory Program Selection Indicator** (MPS)

⓲ **Memory Rewind Indicator** (MEMORY)

⓳ **Counter Reset Button** (COUNTER RESET)

⓴ **Tape Counter**

㉑ **Memory Rewind Switch** (MEMORY)

㉒ **MEMORY/MPS-Off Switch** (OFF)

㉓ **Memory Program Selection Switch** (MPS)

㉔ **Memory Program Selector**

㉕ **Loudness Switch** (LOUDNESS)

㉖ **Dial Light Switch** (LIGHT)

㉗ **Operation Indicator** (OPR)

㉙ **Power/Function Switch** (POWER)

㉚ **Program Source Selector** (SELECTOR)

㉛ **Listening Mode Selector** (MODE)

㉜ **Headphones Jack**

㉝ **External Speaker Jacks**

㉞㊻ **Woofer Speakers**

㉟㊱ **Recording Level Controls** (REC LEVEL)

㊲ **Balance Control** (BALANCE)

㊳ **Edit Lever** (EDIT)

㊴ **Record Lever** (RECORD)

㊵ **Rewind Lever** (REWIND)

㊶ **Fast-Forward Lever** (FF)

㊷ **Playback Lever** (PLAY)

㊸ **Stop Lever** (STOP)

㊹ **Pause Lever** (PAUSE)

㊺ **Eject Lever** (EJECT)

㊼㊿ **Built-in Microphones**

㊽ **FM Antenna Terminals** (FM ANT)

㊾ **AM Antenna Terminals** (AM ANT)

(50) **Telescopic Antennas**

(52) **DC Input Jack** (DC IN 12V)

(53) **AC Voltage Selector** (VOLTAGE SELECTOR)

(54) **AC Input Jack** (AC IN)

(55) **Line Input Jacks** (LINE IN)

(56) **Line Output Jacks** (LINE OUT)

(57) **Phono Input Jacks** (PHONO IN)

(58) **Phono-Earth Terminal** (EARTH)

(59) **DIN Connector Jack** (REC/PB)

(60) **External Microphone Jacks** (MIC)

(61) **Remote Control Jack** (REMOTE)

(62) **Battery Compartment Cover**

DISASSEMBLY INSTRUCTIONS

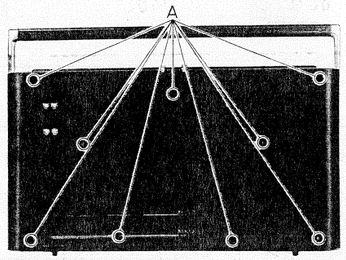

Fig. 2

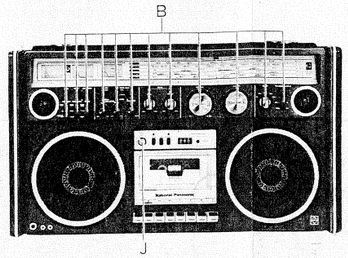

Fig. 3

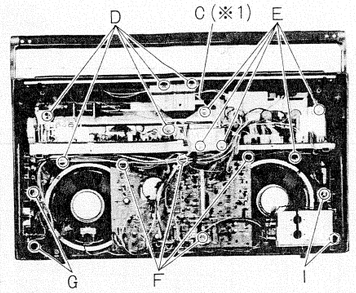

Fig. 4

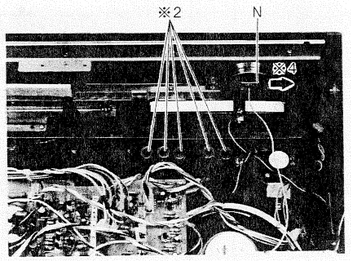

Fig. 5

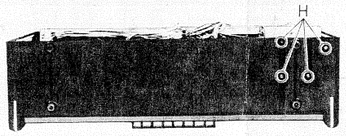

Fig. 6

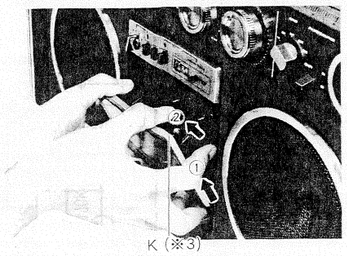

Fig. 7

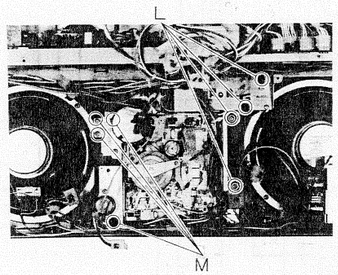

Fig. 8

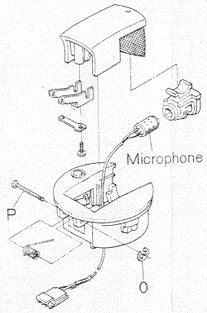

Fig. 9

※1. When mount the chassis, set tuning capacitor to maximum capacity and dial pointer to "0" point of dial scale.

※2. When mount the chassis, insert the knobs at the position, as shown in fig. 5.

※3. Remove the cassette lid in the direction of arrows ① and ②.

※4. Pull out the holder in the direction of arrow.

Procedure	To remove—.	Remove—.	Pcs.	Shown in fig—.
1	Cabinet cover	(A)	(9)	(2)
2	Chassis	(B), (C), (D), (E)	(12), (1), (5), (5)	(3), (4), (4), (4)
3	PC board	(F)	(4)	(4)
4	Jack board assembly	(G)	(2)	(4)
5	Power supply section	(H)	(4)	(6)
6	Jack board	(I)	(2)	(4)
7	Tape deck	(J), (K), (L), (M)	(1), (1), (4), (4)	(3), (7), (8), (8)
8	Microphone	(N), (O), (P)	(1), (1), (1)	(5), (9), (9)

SCHEMATIC DIAGRAM MODEL RS-4360FT TUNER BLOCK

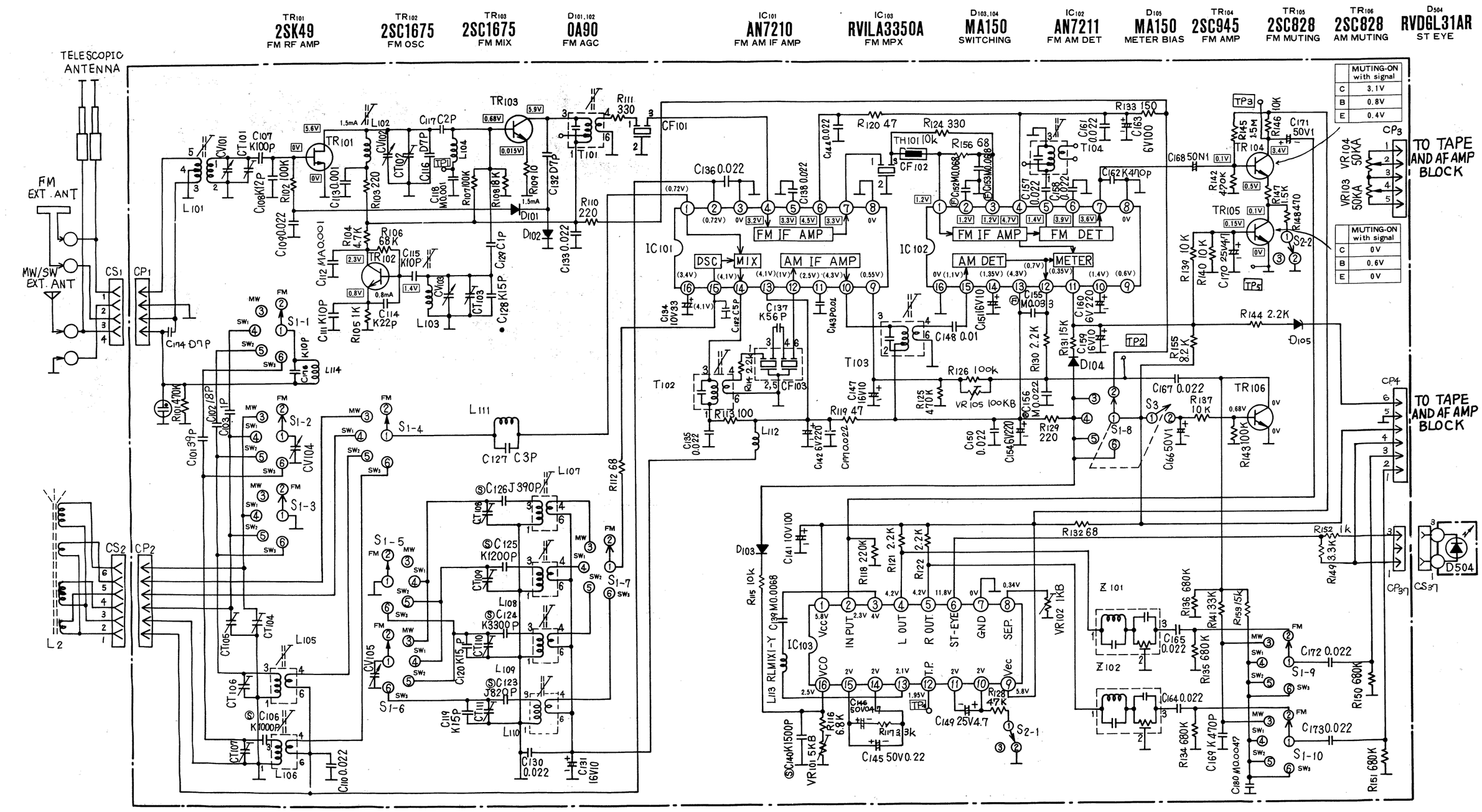

Notes:

1. S_{1-1}~S_{1-10}: Band switch in "FM" position.
2. S_{2-1}, S_{2-2}: FM mode/muting switch in "OFF" position.
3. S_3: AM muting switch in "OFF" position.
4. DC voltage measurements are taken with circuit tester 100kΩ/V from earth.
   [ ].....FM position ( ).....AM position
   IC_{103}.....FM AUTO position
   TR_{106}.....When band switch turning.

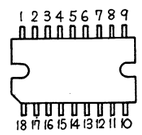

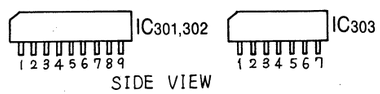

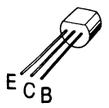

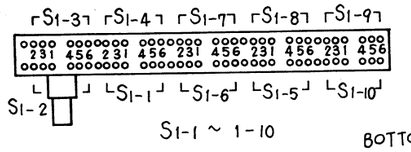

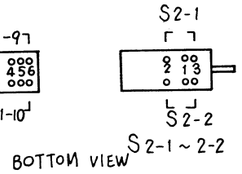

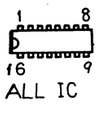

WIRING CONNECTION DIAGRAM MODEL RS-4360FT TUNER BLOCK

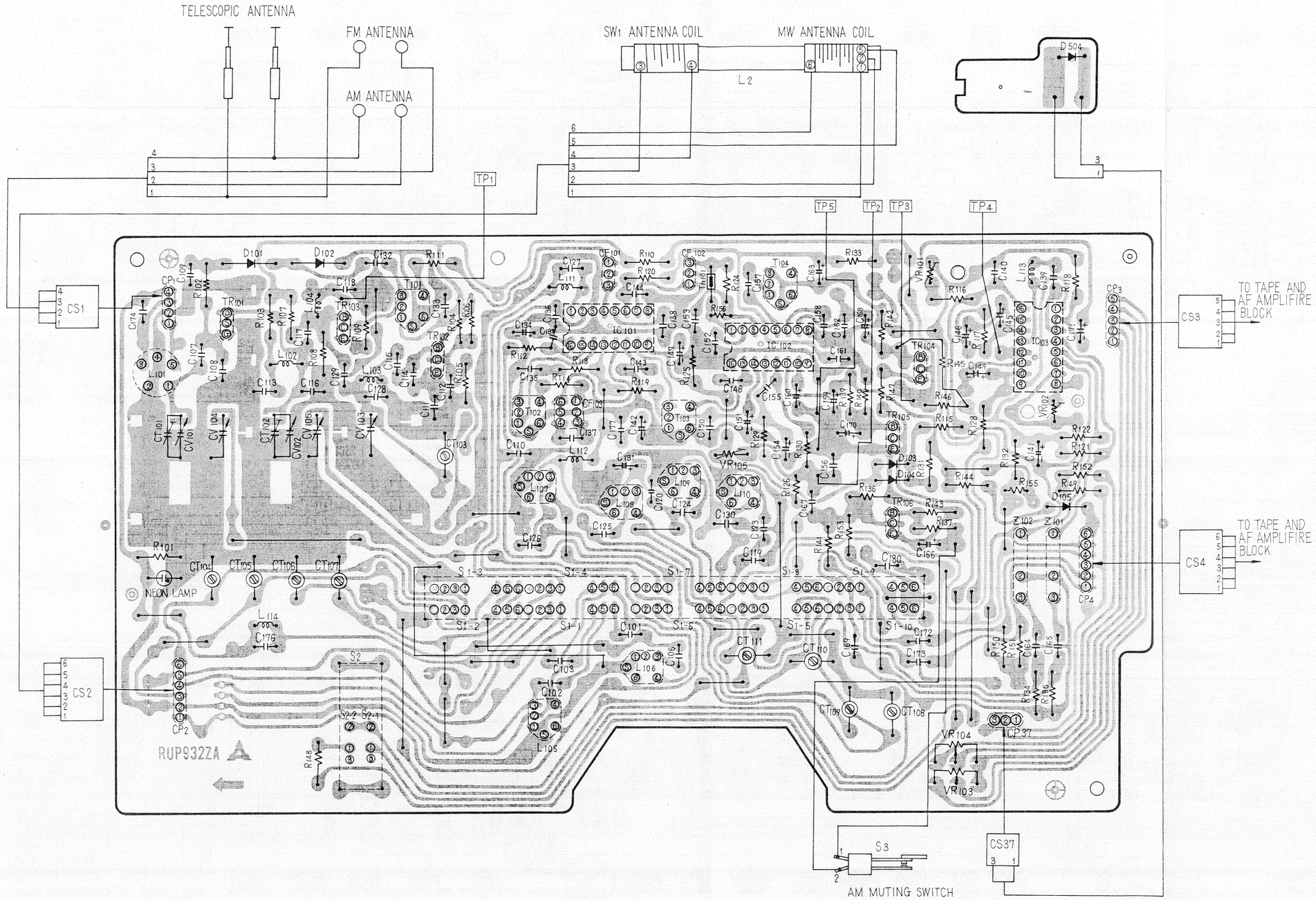

TR101

	FM
D	5.6V
G	0V
S	0V
Id	1.5mA

TR102

	FM
C	2.3V
B	1.4V
E	0.8V
Ie	0.8mA

TR103

	FM
C	5.9V
B	0.68V
E	0.015V
Ie	1.5mA

TR104

	FM	MUTING-ON with signal
C	3.4V	3.1V
B	0.1V	0.8V
E	0.5V	0.4V

TR105

	FM	MUTING-ON with signal
C	0.1V	0V
B	0.15V	0.6V
E	0V	0V

TR106

	When band switch turn
C	0V
B	0.68V
E	0V

IC101

	FM	AM		FM	AM
1	0V	0.72V	9	0V	0.55V
2	0V	0.72V	10	0V	4.3V
3	0V	0V	11	0V	2.5V
4	3.2V	0V	12	0V	1V
5	3.3V	0V	13	0V	4.1V
6	4.5V	0V	14	0V	4.1V
7	3.3V	0V	15	0V	4.1V
8	0V	0V	16	0V	3.4V

IC102

	FM	AM		FM	AM
1	1.2V	0V	9	0V	0.6V
2	1.2V	0V	10	0V	1.4V
3	1.2V	0V	11	0V	0.35V
4	4.7V	0V	12	0V	0.7V
5	1.4V	0V	13	0V	4.3V
6	3.9V	0V	14	0V	1.35V
7	3.6V	0V	15	0V	1.1V
8	0V	0V	16	0V	0V

IC103

	FM Auto		FM Auto
1	5.8V	9	5.8V
2	2.3V	10	2V
3	4V	11	2V
4	4.2V	12	1.95V
5	4.2V	13	2.1V
6	11.8V	14	2V
7	0V	15	2V
8	0.34V	16	2.5V

SCHEMATIC DIAGRAM MODEL RS-4360FT TAPE AND AF AMP BLOCK

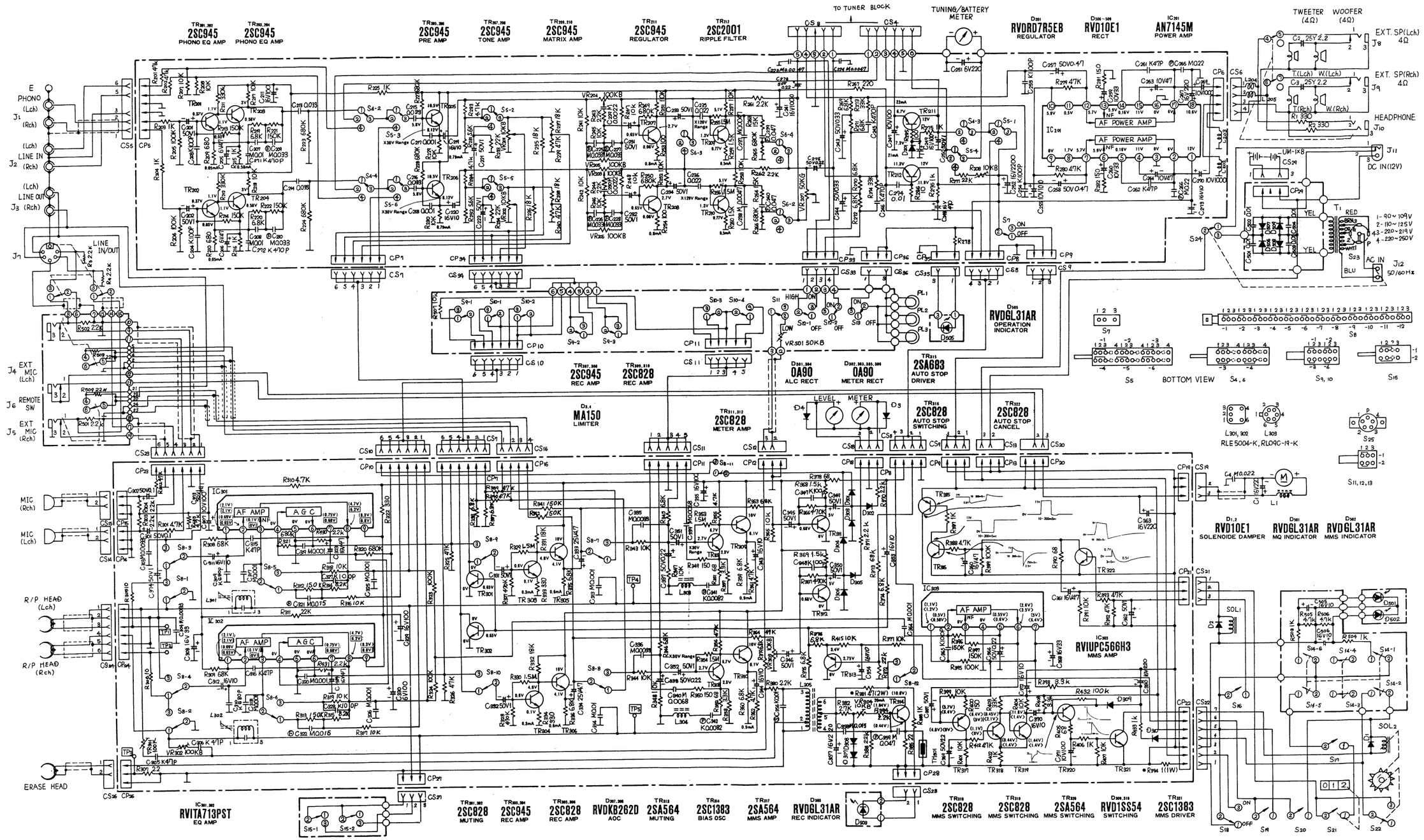

Notes:

1. S_{4-1}~S_{4-3}: Function switch in "PHONO" position.
2. S_{5-1}~S_{5-6}: Power switch in "SLEEP" position.
3. S_{6-1}~S_{6-3}: Mode switch in "STEREO WIDE" position.
4. S_7: Power switch in "OFF" position.
5. S_{8-1}~S_{8-12}: Recording/Play switch in "PLAY" position.
6. S_{9-1}~S_{9-3}: Rec switch in "MANUAL" position.
7. S_{10-1}~S_{10-4}: EQ switch in "NORMAL" position.
8. S_{11}: Bias switch in "NORMAL" position.
9. S_{12}: Loudness switch in "OFF" position.
10. S_{13}: Lamp switch in "OFF" position.
11. S_{14-1}~S_{14-6}: MPS/Memory switch in "OFF" position.
12. S_{15-1}, S_{15-2}: Edit switch in "OFF" position.
13. S_{16}: Solenoide time limit switch.
14. S_{17}: Rewind switch.
15. S_{18}: Tape power switch.
16. S_{19}: FF/Rewind switch.
17. S_{20}: Play switch.
18. S_{21}: Counter switch.
19. S_{22}: MPS switch.
20. S_{23}: AC voltage select switch.
21. S_{24}: AC/DC select switch in "DC" position.
22. DC voltage measurements are taken with circuit tester 100kΩ/V from earth.
    [ ].....Play back ( ).....Recording
    TR301, 302, 313, 317, 318, 319, IC303...MPS—ON, Play and FF or REWIND button push.
    〈 〉.....No signal 〔 〕.....with signal.
23. For parts which are shaded (▒), only parts specified by the manufacturer should be used for replacement in cirtical circuits.

WIRING CONNECTION DIAGRAM MODEL RS-4360FT TAPE AND

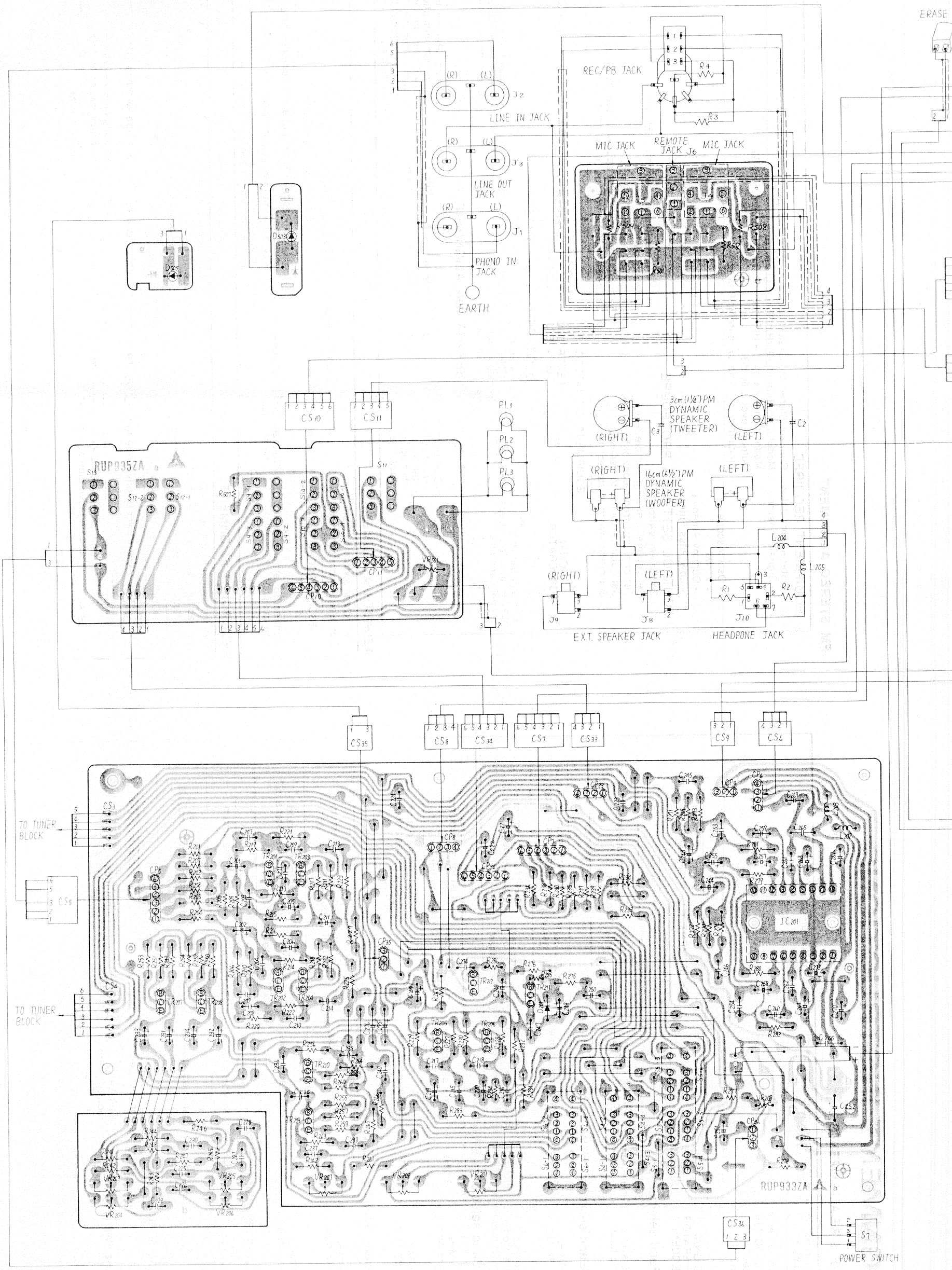

TR201, 202	
C	1.1V
B	0.37V
E	0.03V
Ie	0.05mA

TR203, 204	
C	3V
B	1.15V
E	0.58V
Ie	0.58mA

TR205, 206	
C	10.6V
B	8.12V > 30V Range
E	7.8V
E	0.79mA

TR207, 208	
C	2.7V
B	0.65V
E	0.08V
Ie	0.8mA

TR209, 210	
C	5.1V
B	1.3V < 120V Range
E	0.77V
Ie	0.5mA

TR211	
C	12V
B	7.3V
E	6.7V
Ie	22mA

TR212	
C	12V
B	11.9V
E	11.3V
Ie	21mA

TR301, 302	
	Play-FF or Rewind push
C	0V
B	0.65V
E	0V

TR303, 304	
C	4.8V
B	0.6V
E	0.1V
Ie	0.3mA

TR305, 306	
C	10V
B	4.8V
E	4.1V
Ie	0.6mA

TR307, 308	
C	6.7V
B	2.7V > 30V Range
E	2.3V
Ie	0.68mA

TR309, 310	
C	10V
B	6.7V
E	6.1V
Ie	0.9mA

PE AND AF AMP BLOCK

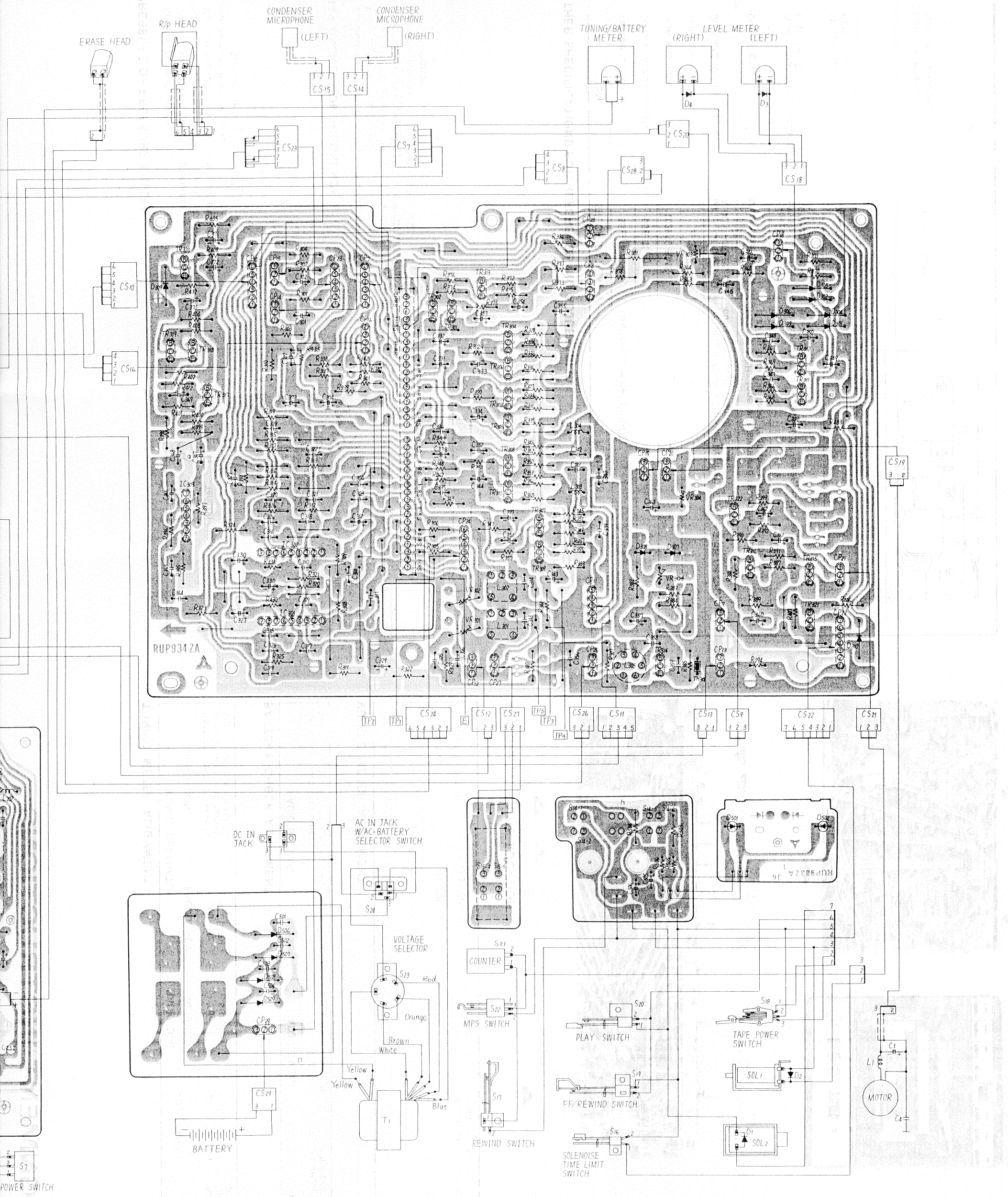

TR308	
	6.7V
	2.7V Range
	2.3V
	68mA

TR309, 310	
C	10V
B	6.7V
E	6.1V
Ie	0.9mA

TR311, 312	
C	5V
B	0.68V
E	0V
Ic	3.3mA

TR313	
C	0V
B	2.75V
E	3.4V

TR314	
	REC
C	10.8V
B	1.04V
E	0.44V
Ie	20mA

TR317	No signal	Whith signal
C	0V	4.8V
B	6.4V	5.7V
E	6.4V	5V
Ic	0.48mA	0.48mA

TR318	No signal	Whith signal
C	2.1V	0.45V
B	0V	1.1V
E	1.4V	0.44V
Ie	0.44mA	0.44mA

TR319	No signal	Whith signal
C	1.4V	11.8V
B	2.1V	0.45V
E	1.4V	0.44V
Ie	1.4mA	1.4mA

IC201			
1	12V	10	5.9V
2	6V	11	0.5V
3	0V	12	5.7V
4	11V	13	5.9V
5	0.16V	14	0.16V
6	5.9V	15	11V
7	5.7V	16	0V
8	1.7V	17	6V
9	0V	18	10.6V

IC301, 302	Playback	Recording
1	2.1V	2.1V
2	0.65V	0.69V
3	0V	0.1V
4	0V	0V
5	0V	0V
6	0V	0V
7	0.68V	0.75V
8	6.2V	4.7V
9	8.8V	8.3V

IC303	No signal	Whith signal
1	1.2V	1.1V
2	0.58V	0.5V
3	0V	0V
4	0V	0V
5	0.6V	0.55V
6	3.5V	2.6V
7	6.4V	5V

ALIGNMENT INSTRUCTIONS

MW, SW_1, SW_2, SW_3, FM, IF & RF ALIGNMENTS

Output of signal generator should be no higher than necessary to obtain an output reading.
Set volume control to maximum.
Power switch to on.
Set bass and treble controls to center.
Set power source voltage to DC 12V.
Set balance control to center.
Set selector switch to radio.
Set loudness switch to off.

	SIGNAL GENERATOR COUPLING	SIGNAL GENERATOR FREQUENCY	RADIO DIAL SETTING	INDICATOR	ADJUSTMENT	REMARKS
	AM IF ALIGNMENT Band selector to MW					
(1)	Fashion loop of several turns of wire and radiate signal into loop of receiver.	455 kHz (400 Hz Mod.)	Point of non-interference (on/about 600 kHz).	Output meter across EXT SP jack.	T_{102} (1st IFT) T_{103} (2nd IFT)	Adjust for maximum output.
	MW RF ALIGNMENT Band selector to MW					
(2)	Same as above.	550 kHz (400 Hz Mod.)	550 kHz	Same as above.	L_{107} (OSC coil) L_2 (ANT coil)	Adjust for maximum output by sliding coil L_2, along ferrite core.
(3)	Same as above.	1500 kHz (400 Hz Mod.)	1500 kHz	Same as above.	CT_{108} (OSC trimmer) CT_{104} (ANT trimmer)	Adjust for maximum output. Repeat steps (2) and (3).
	SW_1 RF ALIGNMENT Band selector to SW_1					
(4)	Same as above.	1.6 MHz (400 Hz Mod.)	1.6 MHz	Same as above.	L_{108} (OSC coil) L_2 (ANT coil)	Adjust for maximum output by sliding coil L_2 along ferrite core.
(5)	Same as above.	4.5 MHz (400 Hz Mod.)	4.5 MHz	Same as above.	CT_{109} (OSC trimmer) CT_{105} (ANT trimmer)	Adjust for maximum output. Repeat steps (4) and (5).
	SW_2 RF ALIGNMENT Band selector to SW_2					
(6)	High side thru. 12 PF to CP1 ④. Negative side to CP1 ② (Fig. 12.)	4.5 MHz (400 Hz Mod.)	4.5 MHz	Same as above.	L_{109} (OSC coil) L_{105} (ANT coil)	Adjust for maximum output.
(7)	Same as above.	12 MHz (400 Hz Mod.)	12 MHz	Same as above.	CT_{110} (OSC trimmer) CT_{106} (ANT trimmer)	Adjust for maximum output. Repeat steps (6) and (7).
	SW_3 RF ALIGNMENT Band selector to SW_3					
(8)	Same as above.	12 MHz (400 Hz Mod.)	12 MHz	Same as above.	L_{110} (OSC coil) L_{106} (ANT coil)	Adjust for maximum output.
(9)	Same as above.	28 MHz	28 MHz	Same as above.	CT_{111} (OSC trimmer) CT_{107} (ANT trimmer)	Adjust for maximum output. Repeat steps (8) and (9).
	FM IF ALIGNMENT Band selector to FM					
(10)	High side thru. 0.001μF to point TP1. Negative side to earth. (Fig. 12.)	10.7 MHz (400 kHz SWP.)	Point of non-interference. (on/about 90 MHz).	Connect vert. amp. of scope to point TP3, Negative side to point TP5. (Fig. 12)	T_{101} (1st IFT) T_{104} (2nd IFT)	Adjust for maximum amplitude. (Refer to fig. 17.)
	FM RF ALIGNMENT Band selector to FM					
(11)	Connect between CP1 ① and ③ through (Fig. 12) dummy antenna. (Refer to fig. 18.)	90 MHz	90 MHz	output meter across EXT SP jack.	L_{103} (OSC coil) L_{102} (TUNE coil) L_{101} (ANT coil)	* Adjust for maximum output.
(12)	Same as above	106 MHz	106 MHz	Same as above.	CT_{103} (OSC trimmer) CT_{102} (TUNE trimmer) CT_{101} (ANT trimmer)	* Adjust for maximum output. Repeat steps (11) and (12).

* Three output responses will be present; proper tuning is the center frequency.

Note: 1. Cement antenna bobbin with wax after completing alignment.
2. Make certain that speaker system or dummy resistor (8Ω) is connected to the EXT SP jack when aligning.

FM STEREO ALIGNMENT

EQUIPMENT REQUIRED

* Stereo Modulator ...Connect Stereo Modulator output to EXT. Mod. terminal of signal generator.
* Signal Generator ...Modulation Rate of 19 kHz Pilot Signal...10%
  Modulation Rate by L+R Signal...27% (Alignment Step 2)
  Output Level ...60 dB
  Frequency .....Approximately 98 MHz
* Oscilloscope
* VTVM
* Dummy Antenna
* Low Pass Filter

CONTROL SETTING & PROCEDURE

Set power switch to on.
Set volume control to audible level.
Set bass and treble control to center.
Set balance control to center.
Set mode switch to stereo.
Set FM mode/muting switch to FM auto.
Set band switch to FM.
Set selector switch to radio.
Set variable capacitor to approximately 98 MHz.
Set power source voltage to DC 12 V.

	EQUIPMENT CONNECTIONS				ADJUSTMENT	REMARKS
	SIGNAL GENERATOR	VTVM	ELECTRONIC COUNTER	OSCIL-LOSCOPE		
	PILOT CIRCUIT ALIGNMENT					
(1)	Connect between CP1 ① and ② through dummy antenna. (Fig. 12)	—	High side to Point TP4. Negative side to earth. (Fig. 12)	—	VR_{101} (VCO)	Adjust VR_{101} for 19 kHz (±50 Hz) reading on electronic counter.
	SEPARATION ALIGNMENT					
(2)	〃	Connect to speaker jack (left side) through low pass filter.	—	Connect to terminal of VTVM.	VR_{102} (Separation Control)	Adjust VR_{102} for the minimum indication on VTVM from the left side output when the right side of Stereo modulator is modulated.

AZIMUTH ALIGNMENT

Set power switch to tape.
Set tape switch to normal.
Set power source voltage to DC 12 V.

OSCILLOSCOPE (L)	OSCILLOSCOPE (R)	ADJUSTMENT
Connect to left channel of line out jack.	Connect to right channel of line out jack.	(1) Set oscilloscope (R) and (L) same condition before adjustment. (2) Play back the test tape (10 kHz). (3) Adjust azimuth adjusting screw for maximum output and for the same phase (R-ch and L-ch).

RECORDING ALIGNMENT

Set rec switch to manual.
Set rec level control to minimum.
Set $VR_{301, 302, 304}$ to center position.
Set power source voltage to DC 12 V.
After setting cassette tape (CrO_2 or normal), set tape deck to recording. (Please use new tape.)

CIRCUIT	AC VTVM CONNECTION	ADJUSTMENT	REMARKS
ERASE BIAS (Use CrO_2 tape)	Connect positive side to test point TP3 and negative side to test point E. (Fig. 13.)	VR_{304} (Fig. 13) (Bias Voltage Control)	Set tape switch to CrO_2. Adjust VR_{304} for 175+15 mV reading on AC VTVM. − 5
BIAS TRAP (Use CrO_2 tape)	Connect positive side to test point TP1 and negative side to test point E. (Fig. 13.)	L_{301} (Fig. 13) (Trap coil)	Set tape switch to CrO_2. Adjust L_{301} for maximum reading on AC VTVM.
	Connect positive side to test point TP2 and negative side to test point E. (Fig. 13)	L_{302} (Fig. 13) (Trap coil)	Set tape switch to CrO_2. Adjust L_{302} for maximum reading on AC VTVM.
CrO_2 BIAS (Use CrO_2 tape)	Connect positive side to test point TP1 and negative side to test point E. (Fig. 13)	VR_{301} (Fig. 13) (Bias Voltage Control)	Set tape switch to CrO_2. Adjust VR_{301} for 3.5±0.2 mV reading on AC VTVM.
	Connect positive side to test point TP2 and negative side to test point E. (Fig. 13)	VR_{302} (Fig. 13) (Bias Voltage Control)	Set tape switch to CrO_2. Adjust VR_{302} for 3.5±0.2 mV reading on AC VTVM.
NORMAL BIAS (Use normal tape)	Connect positive side to test point TP1 and negative side to test point E. (Fig. 13)	VR_{501} (Fig. 12) (Bias Voltage Control)	Set tape switch to normal. Adjust VR_{501} for 2.4±0.1 mV reading on AC VTVM.
	Connect positive side to test point TP2 and negative side to test point E. (Fig. 13)	—	Confirm that AC VTVM reading should be 2.4±0.1 mV.
	Connect positive side to test point TP3 and negative side to test point E. (Fig. 13)	—	Confirm that AC VTVM reading should be more than 100 mV.

A. PRESSURE OF PRESSURE ROLLER

1. Set into playback mode.
2. Connect the tension gauge to the pressure roller lever and pull it in the direction of the arrow as shown in fig. 10.
3. Measure the tension at the moment when the pressure roller moves away from the capstan.
   Standard tension: 300~450 gr

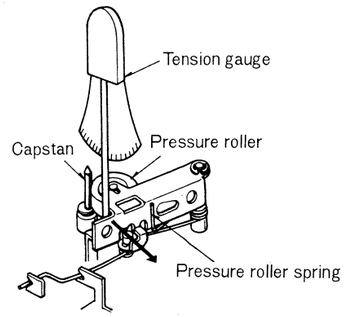

Fig. 10

B. BIAS OSCILLATION FREQUENCY

1. Connect a oscilloscope with AF OSC as shown in fig. 11.
2. Place unit into record mode.
3. Adjust AF OSC to obtain the circular and stationary Lissajous' pattern on the oscilloscope. The bias oscillation frequency is indicated by the scale of AF OSC.
   Standard value: 50±5 kHz

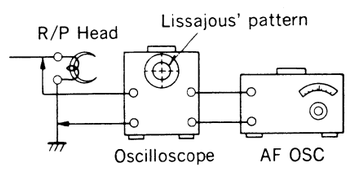

Fig. 11

C. OTHER SPECIFICATIONS FOR REFERENCE (NO ADJUSTABLE)

ITEM	SPECIFICATION	REMARKS
Takeup tension	55±15 gr-cm	Use torque meter SRK-CT.
Tension of detect piece.	65±15 gr	—
Wow and flutter	0.29% RMS	—
Tape speed fluctuation	±3%	—
Standard recording input level	MIC: −70±5 dB AUX: −10±5 dB	To obtain 40μA ±3 dB (at Normal), 70μA ±3 dB (at CrO_2) of current through recording head. f: 1 kHz
Overall gain	More than 300mV	Record 1 kHz tone with standard recording input level, and playing back the tape, read the output value line out.
Overall frequency response CrO_2 TAPE	1 kHz: 0 dB 100 Hz: 0±5 10 kHz: −2+7 −6	Record the signal with 10 dB lower level than standard recording input level.
FF Tension REW Tension	70~130 g.cm	
Gap of R/P head (cue/review mode)	ℓ4.4~5.1 m/m	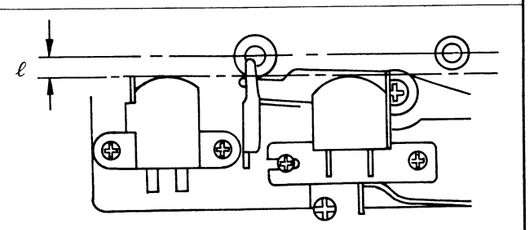

TUNING METER ALIGNMENT

SIGNAL GENERATOR		RADIO DIAL SETTING	ADJUSTMENT	REMARKS
CONNECTION	FREQUENCY			
Fashion loop of several turns of wire and radiate signal into loop of receiver.	1000 kHz (94 dB/m)	Tune to signal.	VR_{105} (Fig. 12) (Meter control)	Adjust VR_{105} so that the indication needle is at the position shown in fig. 15.

BATTERY CHECK ALIGNMENT

RADIO SETTING	ADJUSTMENT	REMARKS
Set power switch to tape. Supply DC 8.4 V from CP9 ① (−), ② (+). (Fig. 12)	VR_{208} (Fig. 12) (Meter Control)	Adjust VR_{208} so that indication needle is at the position shown in fig. 16.

VU/REC METER ALIGNMENT

Set power switch to on. Set power source voltage to DC 12 V.
Set selector to line in.

AF OSCILLATOR		ADJUSTMENT	REMARKS
CONNECTION	FREQUENCY		
Connect to line in jack.	1 kHz (300 mV)	VR_{303} (Fig. 13) (Meter Control)	Adjust VR_{303} so that right channel meter reading is same as left channel meter reading.

ADJUSTMENT PARTS LOCATION

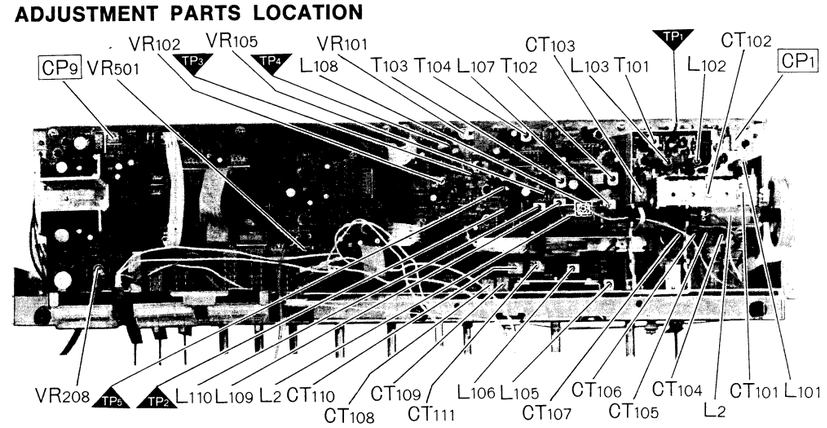

Fig. 12

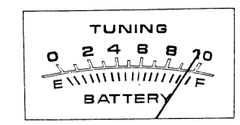

Fig. 15

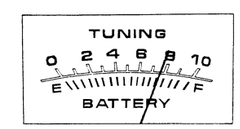

Fig. 16

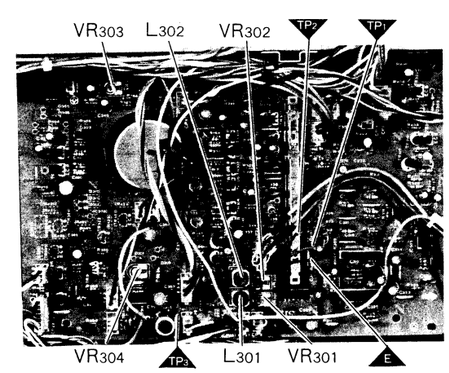

Fig. 13

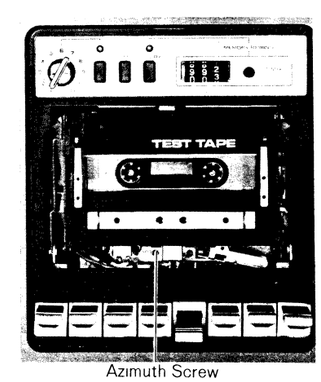

Fig. 14

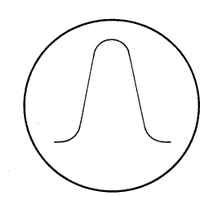

Fig. 17

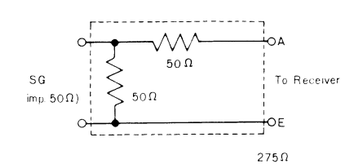

FM Dummy Antenna

Fig. 18

ALIGNMENT INSTRUCTIONS

MW, SW_1, SW_2, SW_3, FM, IF & RF ALIGNMENTS

Output of signal generator should be no higher than necessary to obtain an output reading.
Set volume control to maximum.
Power switch to on.
Set bass and treble controls to center.
Set power source voltage to DC 12V.
Set balance control to center.
Set selector switch to radio.
Set loudness switch to off.

	SIGNAL GENERATOR COUPLING	SIGNAL GENERATOR FREQUENCY	RADIO DIAL SETTING	INDICATOR	ADJUSTMENT	REMARKS
	AM IF ALIGNMENT Band selector to MW					
(1)	Fashion loop of several turns of wire and radiate signal into loop of receiver.	455 kHz (400 Hz Mod.)	Point of non-interference (on/about 600 kHz).	Output meter across EXT SP jack.	T_{102} (1st IFT) T_{103} (2nd IFT)	Adjust for maximum output.
	MW RF ALIGNMENT Band selector to MW					
(2)	Same as above.	550 kHz (400 Hz Mod.)	550 kHz	Same as above.	L_{107} (OSC coil) L_2 (ANT coil)	Adjust for maximum output by sliding coil L_2, along ferrite core.
(3)	Same as above.	1500 kHz (400 Hz Mod.)	1500 kHz	Same as above.	CT_{108} (OSC trimmer) CT_{104} (ANT trimmer)	Adjust for maximum output. Repeat steps (2) and (3).
	SW_1 RF ALIGNMENT Band selector to SW_1					
(4)	Same as above.	1.6 MHz (400 Hz Mod.)	1.6 MHz	Same as above.	L_{108} (OSC coil) L_2 (ANT coil)	Adjust for maximum output by sliding coil L_2 along ferrite core.
(5)	Same as above.	4.5 MHz (400 Hz Mod.)	4.5 MHz	Same as above.	CT_{109} (OSC trimmer) CT_{105} (ANT trimmer)	Adjust for maximum output. Repeat steps (4) and (5).
	SW_2 RF ALIGNMENT Band selector to SW_2					
(6)	High side thru. 12 PF to [CP_1] ④. Negative side to [CP_1] ② (Fig. 12.)	4.5 MHz (400 Hz Mod.)	4.5 MHz	Same as above.	L_{109} (OSC coil) L_{105} (ANT coil)	Adjust for maximum output.
(7)	Same as above.	12 MHz (400 Hz Mod.)	12 MHz	Same as above.	CT_{110} (OSC trimmer) CT_{106} (ANT trimmer)	Adjust for maximum output. Repeat steps (6) and (7).
	SW_3 RF ALIGNMENT Band selector to SW_3					
(8)	Same as above.	12 MHz (400 Hz Mod.)	12 MHz	Same as above.	L_{110} (OSC coil) L_{106} (ANT coil)	Adjust for maximum output.
(9)	Same as above.	28 MHz	28 MHz	Same as above.	CT_{111} (OSC trimmer) CT_{107} (ANT trimmer)	Adjust for maximum output. Repeat steps (8) and (9).
	FM IF ALIGNMENT Band selector to FM					
(10)	High side thru. 0.001μF to point [TP_1]. Negative side to earth. (Fig. 12.)	10.7 MHz (400 kHz SWP.)	Point of non-interference. (on/about 90 MHz).	Connect vert. amp. of scope to point [TP_3], Negative side to point [TP_5]. (Fig. 12)	T_{101} (1st IFT) T_{104} (2nd IFT)	Adjust for maximum amplitude. (Refer to fig. 17.)
	FM RF ALIGNMENT Band selector to FM					
(11)	Connect between [CP_1] ① and ③ through (Fig. 12) dummy antenna. (Refer to fig. 18.)	90 MHz	90 MHz	output meter across EXT SP jack.	L_{103} (OSC coil) L_{102} (TUNE coil) L_{101} (ANT coil)	* Adjust for maximum output.
(12)	Same as above	106 MHz	106 MHz	Same as above.	CT_{103} (OSC trimmer) CT_{102} (TUNE trimmer) CT_{101} (ANT trimmer)	* Adjust for maximum output. Repeat steps (11) and (12).

* Three output responses will be present; proper tuning is the center frequency.

Note: 1. Cement antenna bobbin with wax after completing alignment.
2. Make certain that speaker system or dummy resistor (8Ω) is connected to the EXT SP jack when aligning.

FM STEREO ALIGNMENT

EQUIPMENT REQUIRED

* Stereo Modulator ...Connect Stereo Modulator output to EXT. Mod. terminal of signal generator.
* Signal Generator ...Modulation Rate of 19 kHz Pilot Signal...10%
  Modulation Rate by L+R Signal...27% (Alignment Step 2)
  Output Level ...60 dB
  Frequency .....Approximately 98 MHz
* Oscilloscope
* VTVM
* Dummy Antenna
* Low Pass Filter

CONTROL SETTING & PROCEDURE

Set power switch to on.
Set volume control to audible level.
Set bass and treble control to center.
Set balance control to center.
Set mode switch to stereo.
Set FM mode/muting switch to FM auto.
Set band switch to FM.
Set selector switch to radio.
Set variable capacitor to approximately 98 MHz.
Set power source voltage to DC 12 V.

	EQUIPMENT CONNECTIONS: SIGNAL GENERATOR	VTVM	ELECTRONIC COUNTER	OSCIL-LOSCOPE	ADJUSTMENT	REMARKS
	PILOT CIRCUIT ALIGNMENT					
(1)	Connect between [CP_1] ① and ② through dummy antenna. (Fig. 12)	—	High side to Point [TP_4] Negative side to earth. (Fig. 12)	—	VR_{101} (VCO)	Adjust VR_{101} for 19 kHz (±50 Hz) reading on electronic counter.
	SEPARATION ALIGNMENT					
(2)	〃	Connect to speaker jack (left side) through low pass filter.	—	Connect to terminal of VTVM.	VR_{102} (Separation Control)	Adjust VR_{102} for the minimum indication on VTVM from the left side output when the right side of Stereo modulator is modulated.

AZIMUTH ALIGNMENT

Set power switch to tape.
Set tape switch to normal.
Set power source voltage to DC 12 V.

OSCILLOSCOPE (L)	OSCILLOSCOPE (R)	ADJUSTMENT
Connect to left channel of line out jack.	Connect to right channel of line out jack.	(1) Set oscilloscope (R) and (L) same condition before adjustment. (2) Play back the test tape (10 kHz). (3) Adjust azimuth adjusting screw for maximum output and for the same phase (R-ch and L-ch).

RECORDING ALIGNMENT

Set rec switch to manual.
Set rec level control to minimum.
Set $VR_{301, 302, 304}$ to center position.
Set power source voltage to DC 12 V.
After setting cassette tape (CrO_2 or normal), set tape deck to recording. (Please use new tape.)

CIRCUIT	AC VTVM CONNECTION	ADJUSTMENT	REMARKS
ERASE BIAS (Use CrO_2 tape)	Connect positive side to test point [TP_3] and negative side to test point [E]. (Fig. 13.)	VR_{304} (Fig. 13) (Bias Voltage Control)	Set tape switch to CrO_2. Adjust VR_{304} for 175+15 mV reading on AC VTVM. − 5
BIAS TRAP (Use CrO_2 tape)	Connect positive side to test point [TP_1] and negative side to test point [E]. (Fig. 13.)	L_{301} (Fig. 13) (Trap coil)	Set tape switch to CrO_2. Adjust L_{301} for maximum reading on AC VTVM.
	Connect positive side to test point [TP_2] and negative side to test point [E]. (Fig. 13)	L_{302} (Fig. 13) (Trap coil)	Set tape switch to CrO_2. Adjust L_{302} for maximum reading on AC VTVM.
CrO_2 BIAS (Use CrO_2 tape)	Connect positive side to test point [TP_1] and negative side to test point [E]. (Fig. 13)	VR_{301} (Fig. 13) (Bias Voltage Control)	Set tape switch to CrO_2. Adjust VR_{301} for 3.5±0.2 mV reading on AC VTVM.
	Connect positive side to test point [TP_2] and negative side to test point [E]. (Fig. 13)	VR_{302} (Fig. 13) (Bias Voltage Control)	Set tape switch to CrO_2. Adjust VR_{302} for 3.5±0.2 mV reading on AC VTVM.
NORMAL BIAS (Use normal tape)	Connect positive side to test point [TP_1] and negative side to test point [E]. (Fig. 13)	VR_{501} (Fig. 12) (Bias Voltage Control)	Set tape switch to normal. Adjust VR_{501} for 2.4±0.1 mV reading on AC VTVM.
	Connect positive side to test point [TP_2] and negative side to test point [E]. (Fig. 13)	—	Confirm that AC VTVM reading should be 2.4±0.1 mV.
	Connect positive side to test point [TP_3] and negative side to test point [E]. (Fig. 13)	—	Confirm that AC VTVM reading should be more than 100 mV.

A. PRESSURE OF PRESSURE ROLLER

1. Set into playback mode.
2. Connect the tension gauge to the pressure roller lever and pull it in the direction of the arrow as shown in fig. 10.
3. Measure the tension at the moment when the pressure roller moves away from the capstan.
   Standard tension: 300～450 gr

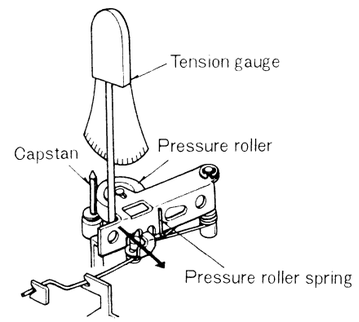

Fig. 10

B. BIAS OSCILLATION FREQUENCY

1. Connect a oscilloscope with AF OSC as shown in fig. 11.
2. Place unit into record mode.
3. Adjust AF OSC to obtain the circular and stationary Lissajous' pattern on the oscilloscope. The bias oscillation frequency is indicated by the scale of AF OSC.
   Standard value: 50±5 kHz

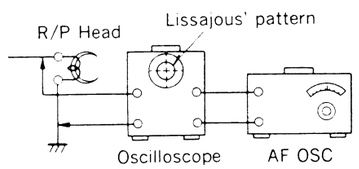

Fig. 11

C. OTHER SPECIFICATIONS FOR REFERENCE (NO ADJUSTABLE)

ITEM	SPECIFICATION	REMARKS
Takeup tension	55±15 gr-cm	Use torque meter SRK-CT.
Tension of detect piece.	65±15 gr	—
Wow and flutter	0.29% RMS	—
Tape speed fluctuation	±3%	—
Standard recording input level	MIC: −70±5 dB AUX: −10±5 dB	To obtain 40μA ±3 dB (at Normal), 70μA ±3 dB (at CrO_2) of current through recording head. f: 1 kHz
Overall gain	More than 300mV	Record 1 kHz tone with standard recording input level, and playing back the tape, read the output value line out.
Overall frequency response CrO_2 TAPE	1 kHz: 0 dB 100 Hz: 0±5 10 kHz: −2+7 −6	Record the signal with 10 dB lower level than standard recording input level.
FF Tension REW Tension	70～130 g.cm	
Gap of R/P head (cue/review mode)	(4.4～5.1 m/m	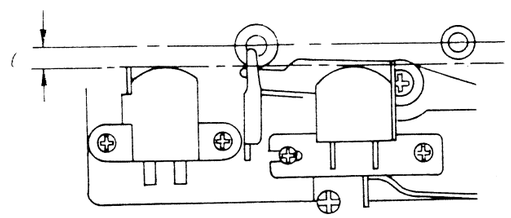

TUNING METER ALIGNMENT

SIGNAL GENERATOR		RADIO DIAL SETTING	ADJUSTMENT	REMARKS
CONNECTION	FREQUENCY			
Fashion loop of several turns of wire and radiate signal into loop of receiver.	1000 kHz (94 dB/m)	Tune to signal.	VR_{105} (Fig. 12) (Meter control)	Adjust VR_{105} so that the indication needle is at the position shown in fig. 15.

BATTERY CHECK ALIGNMENT

RADIO SETTING	ADJUSTMENT	REMARKS
Set power switch to tape. Supply DC 8.4 V from CP9 ① (−), ② (+). (Fig. 12)	VR_{208} (Fig. 12) (Meter Control)	Adjust VR_{208} so that indication needle is at the position shown in fig. 16.

VU/REC METER ALIGNMENT

Set power switch to on. Set power source voltage to DC 12 V.
Set selector to line in.

AF OSCILLATOR		ADJUSTMENT	REMARKS
CONNECTION	FREQUENCY		
Connect to line in jack.	1 kHz (300 mV)	VR_{303} (Fig. 13) (Meter Control)	Adjust VR_{303} so that right channel meter reading is same as left channel meter reading.

ADJUSTMENT PARTS LOCATION

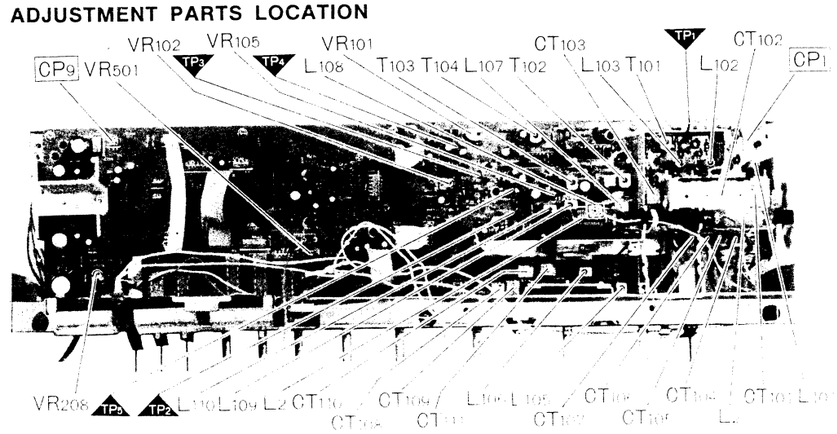

Fig. 12

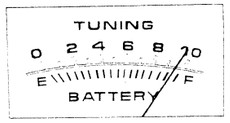

Fig. 15

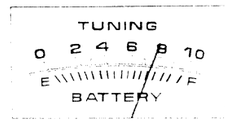

Fig. 16

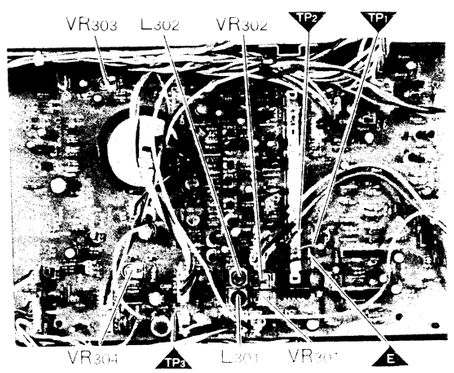

Fig. 13

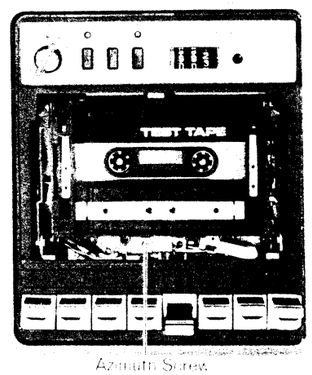

Fig. 14

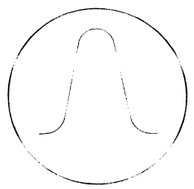

Fig. 17

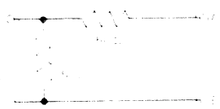

FM Dummy Antenna

Fig. 18

DIAL THREADING

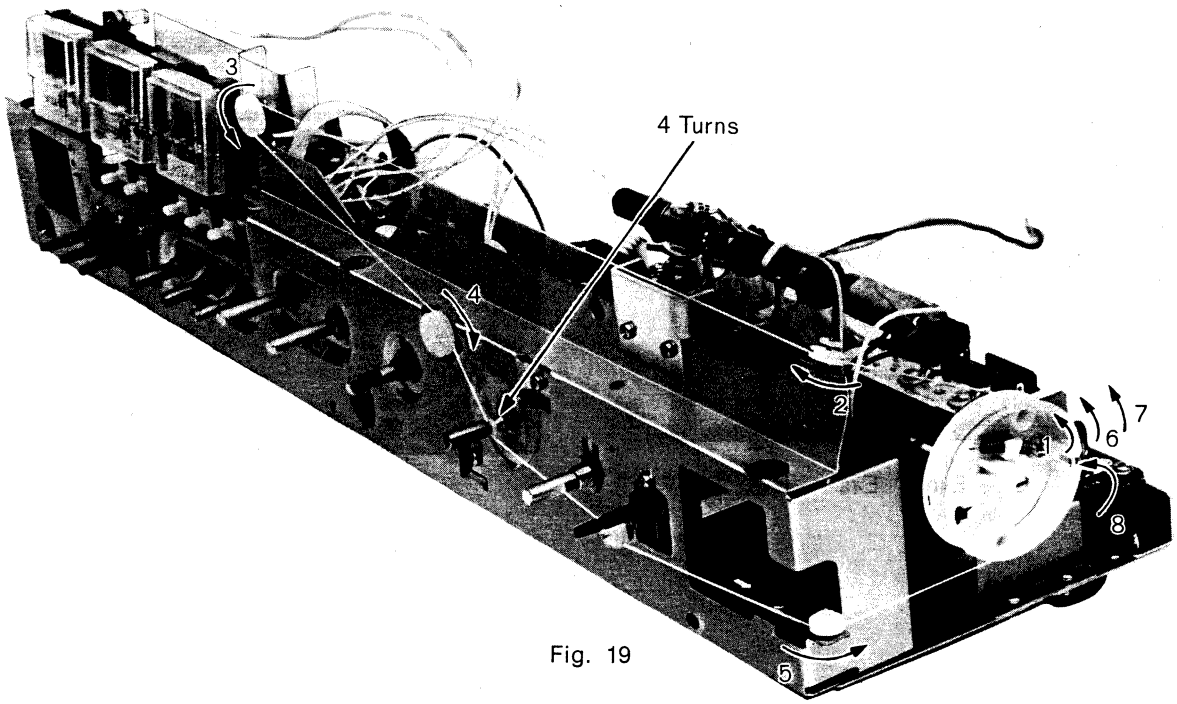

Fig. 19

BLOCK DIAGRAM OF ELECTRICAL CIRCUITS

RECORDING CIRCUIT
(·····line indicates recording signal coming from condenser microphone.)

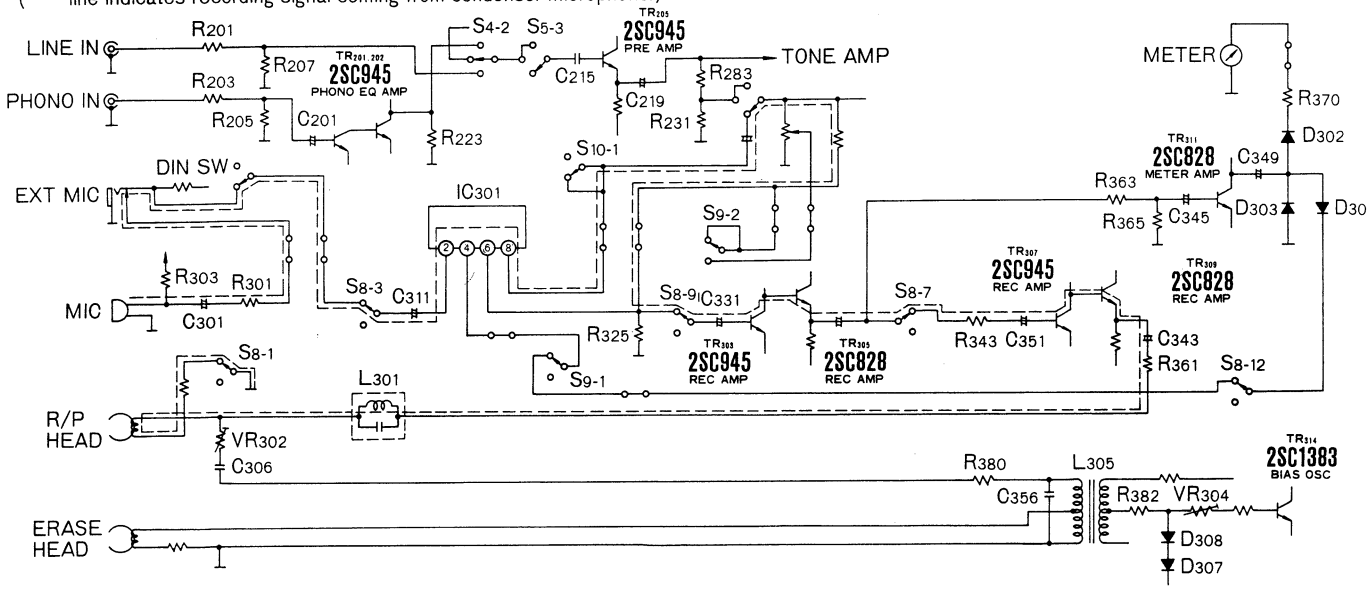

PLAYBACK CIRCUIT

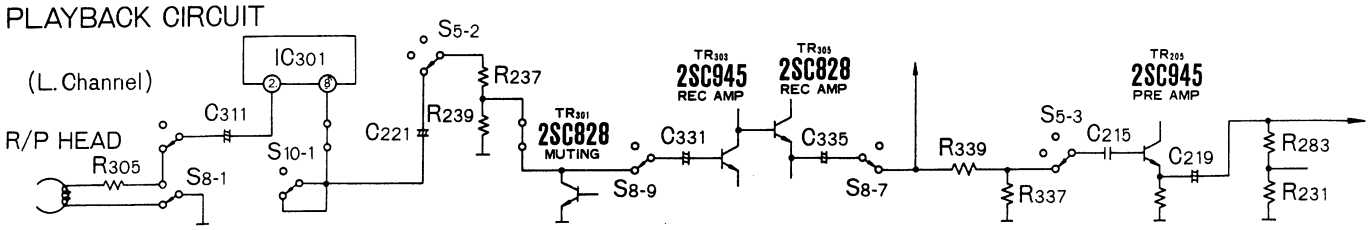

ELECTRICAL PARTS LOCATION

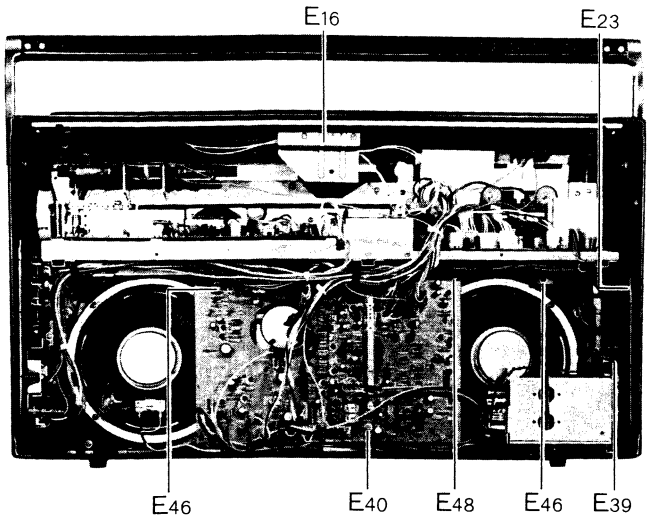

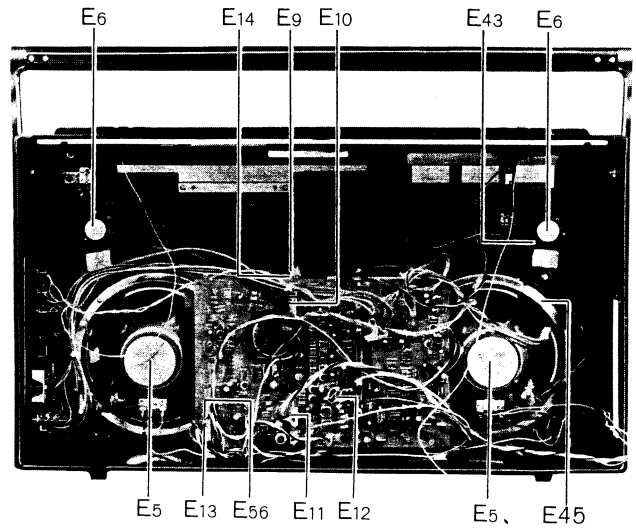

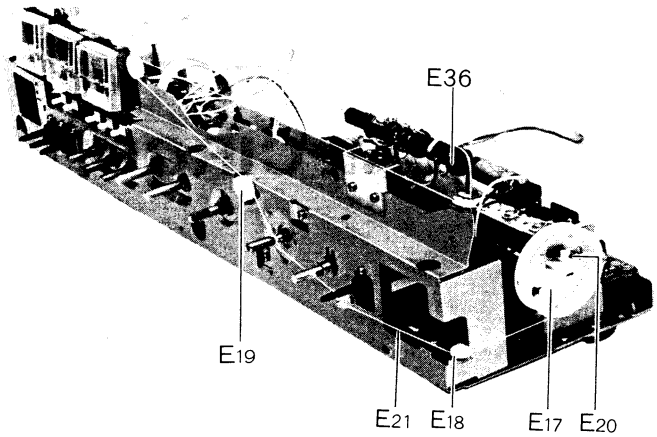

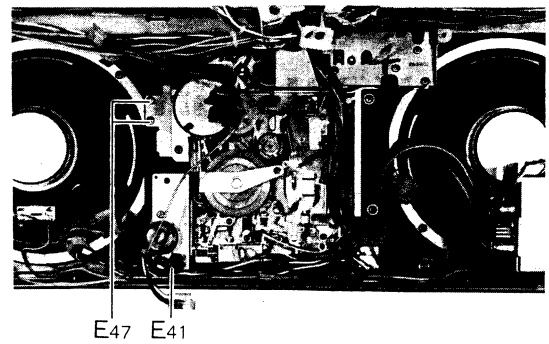

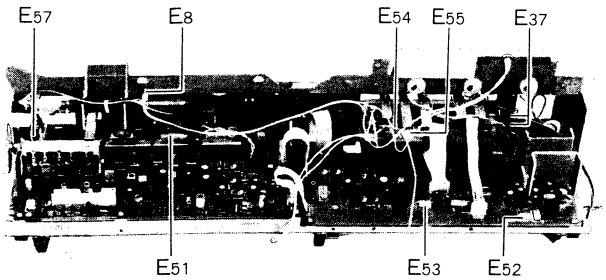

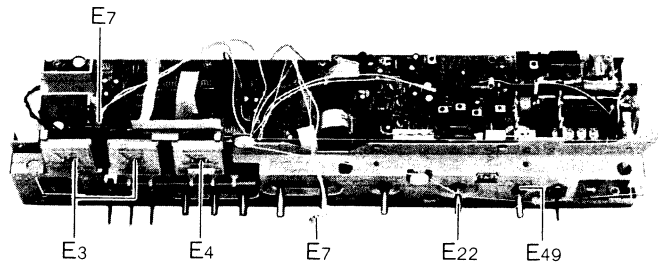

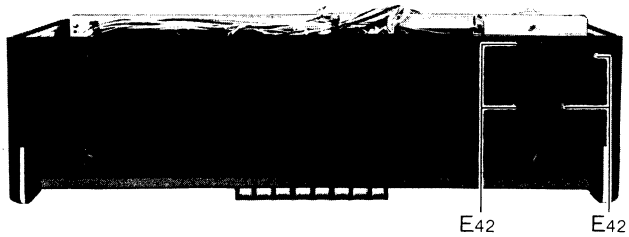

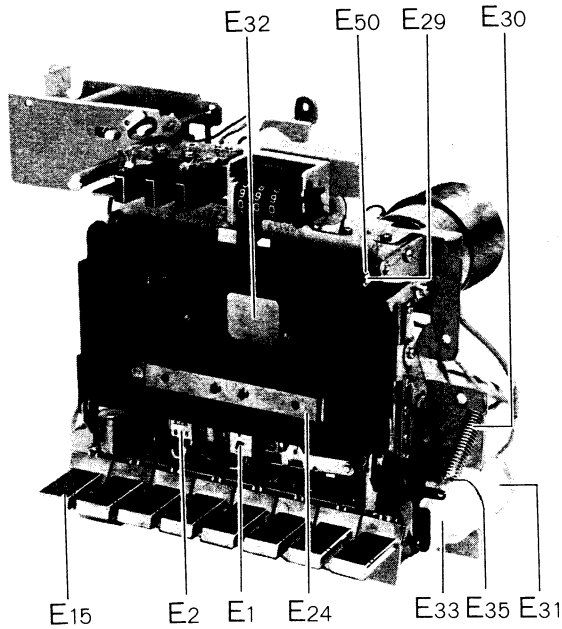

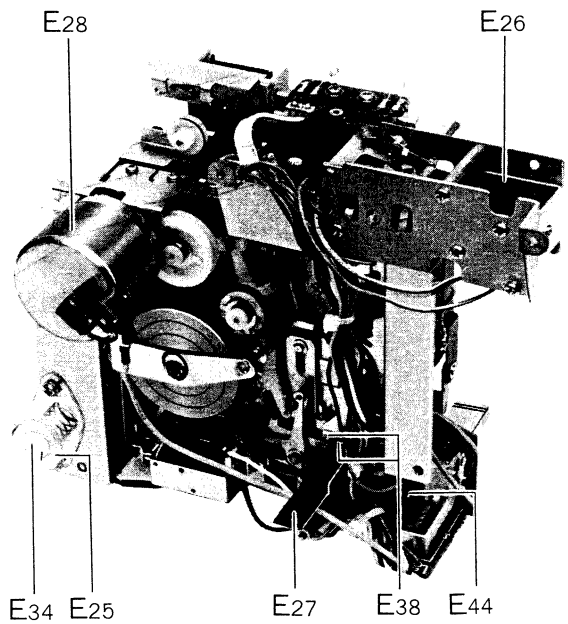

CABINET PARTS

EXPLODED VIEWS

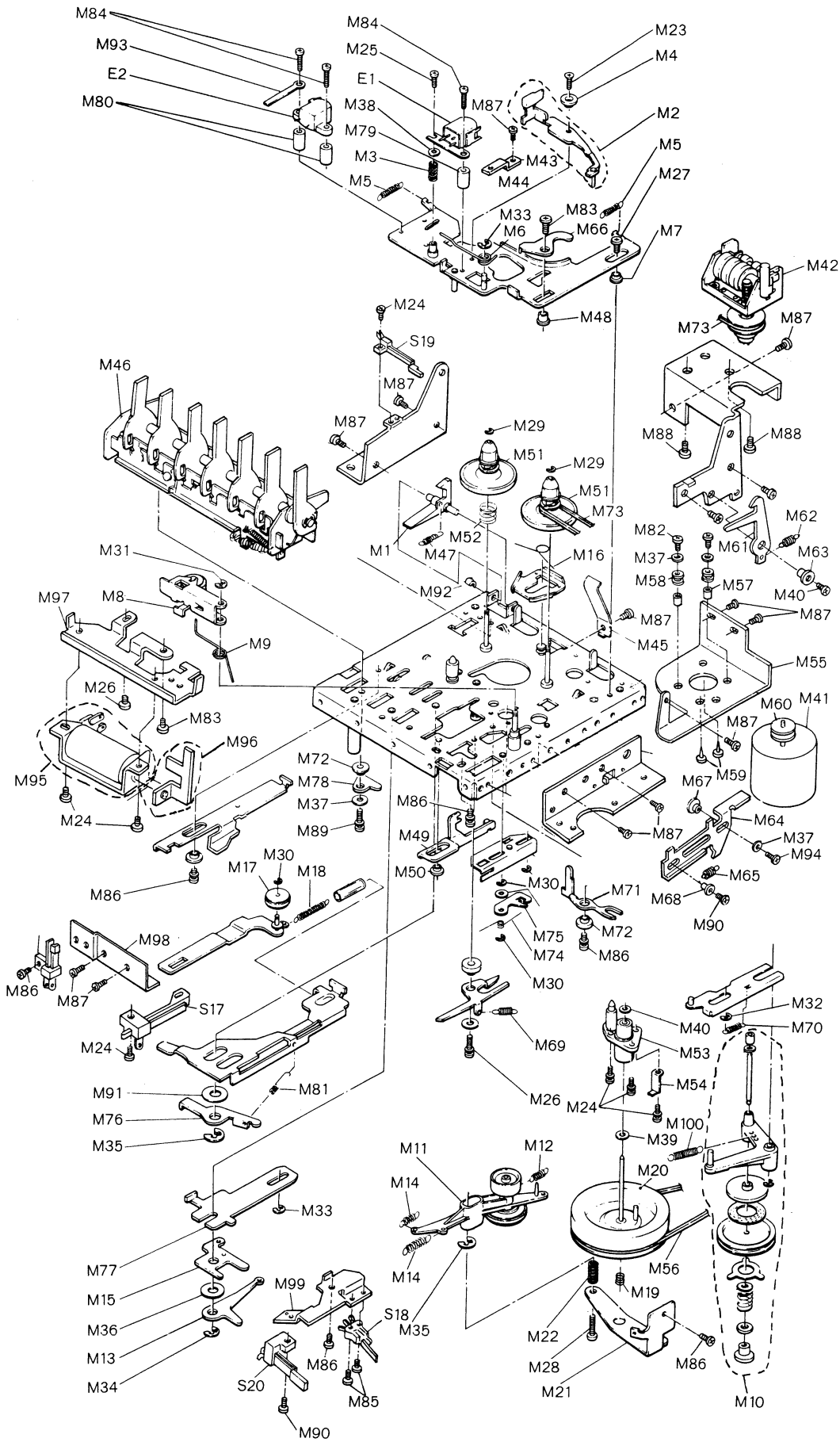

■REPLACEMENT PARTS LIST
Model RS-4360FT

(RD7804-1558)

RS-4360FT

NOTES: 1. Part numbers are indicated on most mechanical parts.
Please use this part number for parts orders.
2. Components identified by shaded area have special characteristic important for safety.
When replacing any of these components use only manufacturer's specified parts.
3. Part numbers shown in bold letters are service standard parts and may differ from production parts.
4. The ○ mark is used by the manufacturing plant only.

Ref. No.	Part No.	Part Name & Description	Per Set		Remarks
		MECHANICAL PARTS			
M1	RFE1Z	Lever, Safety	1		○
M2	RFD9001Z	Lever Assembly, Auto-Stop Sensing	1		○
M3	RFS1Z	Spring, R/P Head	1		○
M4	RFD1Z	Spacer, Auto-Stop Sensing Lever	1		○
M5	RFS2Z	Spring, Head Base	2		○
M6	RFS3Z	Spring, Pinch Roller Assembly	1		○
M7	RFD2Z	Spacer, Auto-Stop Sensing Lever	1		○
M8	RFD3Z	Pinch Roller Assembly	1		○
M9	RFS4Z	Spring, Pinch Roller Assembly	1		○
M10	RFD9002Z	Clutch Assembly	1		○
M11	RFE2Z	Fast Forward Idler Assembly	1		○
M12	RFS5Z	Spring, Fast Forward Idler Assembly	1		○
M13	RFD4Z	Lever, Fast Forward	1		○
M14	RFS6Z	Spring, Fast Forward Lever & Rewind Lever	2		○
M15	RFD5Z	Lever, Rewind	1		○
M16	RFS7Z	Spring, Brake Arm	1		○
M17	RFE3Z	Idler, Rewind	1		○
M18	RFS8Z	Spring, Rewind Idler	1		○
M19	RFS9Z	Spring, Flywheel	1		○
M20	RFF1Z	Flywheel	1		○
M21	RFD6Z	Bracket, Flywheel	1		○
M22	RFS10Z	Spring, Flywheel	1		○
M23	XSS2+5	Screw, Auto-Stop Sensing Lever Assembly M'tg	1		
M24	XYN2+5	Screw, Flywheel Holder & etc. M'tg	8		
M25	XSN2+6	Screw, R/P Head M'tg & Azimuth Adjusting	1		
M26	XYN2.6+7	Screw, Plunger Bracket M'tg	2		
M27	XSB2.6+4	Screw, Head Base M'tg	1		
M28	XSN2.6+10	Screw, Flywheel Bracket M'tg	1		
M29	XUC12FY	Circlip, Reel Table M'tg	2		○
M30	XUC15FY	Circlip, Pause Lever & etc. M'tg	4		
M31	XUC19FY	Circlip, Pinch Roller M'tg	1		○
M32	XUC2FY	Circlip, Clutch Assembly & etc. M'tg	2		
M33	XUC25FY	Circlip, Review Bracket & etc. M'tg	2		
M34	XUC32FY	Circlip, Fast Forward & Rewind Lever M'tg	1		○

Ref. No.	Part No.	Part Name & Description	Per Set		Remarks
M35	XUC4FY	Circlip, Fast Forward Idler Assembly & etc. M'tg	2		
M36	RFN1Z	Nylon Washer, Fast Forward & Rewind Lever	1		○
M37	XWG26	Washer, Stopper, Motor & etc.	4		
M38	XWG2	Washer, R/P Head	1		
M39	RFN2Z	Nylon Washer, Flywheel	1		○
M40	RFN3Z	Nylon Washer, Flywheel	1		○
M41	MMI6C2HCXA	DC Motor	1		○
M42	RSE60Z-T	Tape Counter	1		○
M43	RFD7Z	Bracket, Head Base	1		○
M44	RFD8Z	Steel Ball, Head Base Bracket	1		○
M45	RFS11Z	Retainer, Cassette tape	1		○
M46	RFD9Z	Button Mechanism Assembly	1		○
M47	RFS12Z	Spring, Safety Lever	1		○
M48	RFD10Z	Spacer, Eject Stopper	1		○
M49	RFD11Z	Lever, Play	1		○
M50	RFD12Z	Spacer, Play Lever	1		○
M51	RFE4Z	Reel Table	2		○
M52	RFS13Z	Spring, Reel Table	1		○
M53	RFE5Z	Holder, Flywheel Shaft	1		○
M54	RFD13Z	Bracket, Flywheel Holder	1		○
M55	RFD14Z	Bracket, Motor	1		○
M56	RFB1Z	Belt, Motor	1		○
M57	RFD15Z	Spacer, Motor	2		○
M58	RFI1Z	Rubber, Motor	2		○
M59	RFI2Z	Rubber, Motor	2		○
M60	RFQ1Z	Motor Pulley	1		○
M61	RFD16Z	Pawl, Eject	1		○
M62	RFS14Z	Spring, Eject Pawl	1		○
M63	RFD17Z	Spacer, Eject Pawl	1		○
M64	RFD18Z	Lever, Eject	1		○
M65	RFS15Z	Spring, Eject Lever	1		○
M66	RFD19Z	Stopper, Eject Lever	1		○
M67	RFD20Z	Spacer, Eject Lever	1		○
M68	RFD21Z	Spacer, Eject Lever	1		○
M69	RFS16Z	Spring, Auto Lever	1		○
M70	RFS17Z	Spring, Lever	1		○
M71	RFD22Z	Lever, Arm	1		○
M72	RFD23Z	Spacer, Arm Lever	1		○
M73	RFB2Z	Belt, Tape Counter	1		○
M74	RFS18Z	Spring, Pause Lever	1		○
M75	RFD24Z	Lever, Pause	1		○
M76	RFD25Z	Lever, Review	1		○
M77	RFD26Z	Bracket, Review	1		○
M78	RFD27Z	Stopper, Edit	1		○
M79	RFD28Z	Spacer, R/P Head	1		○
M80	RFD29Z	Spacer, Erase Head	2		○
M81	RFS19Z	Spring, Review Lever	1		○
M82	XSN2.6+6	Screw, Motor M'tg	2		
M83	XSB2.6+6	Screw, Eject Lever Stopper & etc. M'tg	2		
M84	XSN2+10	Screw, R/P & Erase Head M'tg	3		
M85	XYN2+8	Screw, Tape Power Switch M'tg	2		
M86	XYN2.6+5	Screw, Flywheel Bracket & etc. M'tg	6		
M87	XTN2.6+4H	Screw, Motor Bracket & etc. M'tg	12		
M88	XSS3+5	Screw, Tape Counter M'tg	2		

Ref. No.	Part No.	Part Name & Description	Per Set		Remarks
M89	XYN2.6+8	Screw, Edit Stopper M'tg	1		
M90	XYN2.6+6	Screw, Eject Pawl & etc. M'tg	3		
M91	RFN4Z	Nylon Washer, Fast Forward & Rewind	1		○
M92	RFD30Z	Stopper, Safety Lever	1		○
M93	RFD31Z	Lead Clamper, Erase Head	1		○
M94	XTN2.6+6H	Screw, Eject Lever M'tg	1		
M95	RFP9001Z	Plunger Assembly	1		○
M96	RFD9003Z	Plunger Bracket Assembly	1		○
M97	RFD32Z	Bracket, Plunger	1		○
M98	RFD33Z	Bracket, Leaf Switch	1		○
M99	RFD34Z	Bracket, Leaf Switch	1		○
M100	RFS20Z	Spring, Clutch Assembly	1		○
		RESISTORS			
R1	**ERD25TJ331**	Carbon Resistor, 330Ω, ¼W	1		
R2	**ERD25TJ331**	Carbon Resistor, 330Ω, ¼W	1		
R3	**ERD25TJ222**	Carbon Resistor, 2.2KΩ, ¼W	1		
R4	**ERD25TJ222**	Carbon Resistor, 2.2KΩ, ¼W	1		
R101	**ERD25TJ474**	Carbon Resistor, 470KΩ, ¼W	1		
R102	**ERD25TJ104**	Carbon Resistor, 100KΩ, ¼W	1		
R103	**ERD25TJ221**	Carbon Resistor, 220Ω, ¼W	1		
R104	**ERD25TJ472**	Carbon Resistor, 4.7KΩ, ¼W	1		
R105	**ERD25TJ102**	Carbon Resistor, 1KΩ, ¼W	1		
R106	**ERD25TJ683**	Carbon Resistor, 68KΩ, ¼W	1		
R107	**ERD25TJ104**	Carbon Resistor, 100KΩ, ¼W	1		
R108	**ERD25TJ183**	Carbon Resistor, 18KΩ, ¼W	1		
R109	**ERD25TJ100**	Carbon Resistor, 10Ω, ¼W	1		
R110	**ERD25TJ221**	Carbon Resistor, 220Ω, ¼W	1		
R111	**ERD25TJ331**	Carbon Resistor, 330Ω, ¼W	1		
R112	**ERD25TJ680**	Carbon Resistor, 68Ω, ¼W	1		
R113	**ERD25TJ101**	Carbon Resistor, 100Ω, ¼W	1		
R114	**ERD25TJ222**	Carbon Resistor, 2.2KΩ, ¼W	1		
R115	**ERD25TJ103**	Carbon Resistor, 10KΩ, ¼W	1		
R116	**ERD25TJ682**	Carbon Resistor, 6.8KΩ, ¼W	1		
R117	**ERD25TJ332**	Carbon Resistor, 3.3KΩ, ¼W	1		
R118	**ERD25TJ224**	Carbon Resistor, 220KΩ, ¼W	1		
R119	**ERD25TJ470**	Carbon Resistor, 47KΩ, ¼W	1		
R120	**ERD25TJ470**	Carbon Resistor, 47KΩ, ¼W	1		
R121	**ERD25TJ222**	Carbon Resistor, 2.2KΩ, ¼W	1		
R122	**ERD25TJ222**	Carbon Resistor, 2.2KΩ, ¼W	1		
R124	**ERD25TJ331**	Carbon Resistor, 330Ω, ¼W	1		
R125	**ERD25TJ474**	Carbon Resistor, 470KΩ, ¼W	1		
R126	**ERD25TJ104**	Carbon Resistor, 100KΩ, ¼W	1		
R128	**ERD25TJ473**	Carbon Resistor, 47KΩ, ¼W	1		
R129	**ERD25TJ221**	Carbon Resistor, 220Ω, ¼W	1		
R130	**ERD25TJ222**	Carbon Resistor, 2.2KΩ, ¼W	1		
R131	**ERD25TJ153**	Carbon Resistor, 15KΩ, ¼W	1		
R132	**ERD25TJ680**	Carbon Resistor, 68Ω, ¼W	1		
R133	**ERD25TJ151**	Carbon Resistor, 150Ω, ¼W	1		
R134	**ERD25TJ684**	Carbon Resistor, 680KΩ, ¼W	1		
R135	**ERD25TJ684**	Carbon Resistor, 680KΩ, ¼W	1		
R136	**ERD25TJ684**	Carbon Resistor, 680KΩ, ¼W	1		
R137	**ERD25TJ103**	Carbon Resistor, 10KΩ, ¼W	1		
R139	**ERD25TJ103**	Carbon Resistor, 10KΩ, ¼W	1		

Ref. No.	Part No.	Part Name & Description	Per Set		Remarks
R140	**ERD25TJ103**	Carbon Resistor, 10KΩ, ¼W	1		
R141	**ERD25TJ333**	Carbon Resistor, 33KΩ, ¼W	1		
R142	**ERD25TJ474**	Carbon Resistor, 470KΩ, ¼W	1		
R143	**ERD25TJ104**	Carbon Resistor, 100KΩ, ¼W	1		
R144	**ERD25TJ222**	Carbon Resistor, 2.2KΩ, ¼W	1		
R145	ERD25TJ155	Carbon Resistor, 1.5MΩ, ¼W	1		
R146	**ERD25TJ103**	Carbon Resistor, 10KΩ, ¼W	1		
R147	**ERD25TJ152**	Carbon Resistor, 1.5KΩ, ¼W	1		
R148	**ERD25TJ471**	Carbon Resistor, 470Ω, ¼W	1		
R149	**ERD25TJ332**	Carbon Resistor, 3.3KΩ, ¼W	1		
R150	**ERD25TJ684**	Carbon Resistor, 680KΩ, ¼W	1		
R151	**ERD25TJ684**	Carbon Resistor, 680KΩ, ¼W	1		
R152	**ERD25TJ102**	Carbon Resistor, 1KΩ, ¼W	1		
R153	**ERD25TJ153**	Carbon Resistor, 15KΩ, ¼W	1		
R155	**ERD25TJ822**	Carbon Resistor, 8.2KΩ, ¼W	1		
R156	**ERD25TJ680**	Carbon Resistor, 68Ω, ¼W	1		
R201	**ERD25TJ473**	Carbon Resistor, 47KΩ, ¼W	1		
R202	**ERD25TJ473**	Carbon Resistor, 47KΩ, ¼W	1		
R203	**ERD25TJ102**	Carbon Resistor, 1KΩ, ¼W	1		
R204	**ERD25TJ102**	Carbon Resistor, 1KΩ, ¼W	1		
R205	**ERD25TJ104**	Carbon Resistor, 100KΩ, ¼W	1		
R206	**ERD25TJ104**	Carbon Resistor, 100KΩ, ¼W	1		
R207	**ERD25TJ103**	Carbon Resistor, 10KΩ, ¼W	1		
R208	**ERD25TJ103**	Carbon Resistor, 10KΩ, ¼W	1		
R209	**ERD25TJ681**	Carbon Resistor, 680Ω, ¼W	1		
R210	**ERD25TJ681**	Carbon Resistor, 680Ω, ¼W	1		
R211	**ERD25TJ334**	Carbon Resistor, 330KΩ, ¼W	1		
R212	**ERD25TJ334**	Carbon Resistor, 330KΩ, ¼W	1		
R213	**ERD25TJ154**	Carbon Resistor, 150KΩ, ¼W	1		
R214	**ERD25TJ154**	Carbon Resistor, 150KΩ, ¼W	1		
R215	**ERD25TJ102**	Carbon Resistor, 1KΩ, ¼W	1		
R216	**ERD25TJ102**	Carbon Resistor, 1KΩ, ¼W	1		
R217	**ERD25TJ103**	Carbon Resistor, 10KΩ, ¼W	1		
R218	**ERD25TJ103**	Carbon Resistor, 10KΩ, ¼W	1		
R219	**ERD25TJ682**	Carbon Resistor, 6.8KΩ, ¼W	1		
R220	**ERD25TJ682**	Carbon Resistor, 6.8KΩ, ¼W	1		
R221	**ERD25TJ154**	Carbon Resistor, 150KΩ, ¼W	1		
R222	**ERD25TJ154**	Carbon Resistor, 150KΩ, ¼W	1		
R223	**ERD25TJ684**	Carbon Resistor, 680KΩ, ¼W	1		
R224	**ERD25TJ684**	Carbon Resistor, 680KΩ, ¼W	1		
R225	**ERD25TJ102**	Carbon Resistor, 1KΩ, ¼W	1		
R227	**ERD25TJ684**	Carbon Resistor, 680KΩ, ¼W	1		
R228	**ERD25TJ684**	Carbon Resistor, 680KΩ, ¼W	1		
R229	**ERD25TJ103**	Carbon Resistor, 10KΩ, ¼W	1		
R230	**ERD25TJ103**	Carbon Resistor, 10KΩ, ¼W	1		
R231	**ERD25TJ562**	Carbon Resistor, 5.6KΩ, ¼W	1		
R232	**ERD25TJ562**	Carbon Resistor, 5.6KΩ, ¼W	1		
R233	**ERD25TJ223**	Carbon Resistor, 22KΩ, ¼W	1		
R234	**ERD25TJ223**	Carbon Resistor, 22KΩ, ¼W	1		
R235	**ERD25TJ183**	Carbon Resistor, 18KΩ, ¼W	1		
R236	**ERD25TJ183**	Carbon Resistor, 18KΩ, ¼W	1		
R237	**ERD25TJ183**	Carbon Resistor, 18KΩ, ¼W	1		
R238	**ERD25TJ183**	Carbon Resistor, 18KΩ, ¼W	1		
R239	**ERD25TJ473**	Carbon Resistor, 47KΩ, ¼W	1		
R240	**ERD25TJ473**	Carbon Resistor, 47KΩ, ¼W	1		
R241	**ERD25TJ103**	Carbon Resistor, 10KΩ, ¼W	1		
R242	**ERD25TJ103**	Carbon Resistor, 10KΩ, ¼W	1		

Ref. No.	Part No.	Part Name & Description	Per Set		Remarks
R243	ERD25TJ222	Carbon Resistor, 2.2KΩ, ¼W	1		
R244	ERD25TJ222	Carbon Resistor, 2.2KΩ, ¼W	1		
R245	ERD25TJ103	Carbon Resistor, 10KΩ, ¼W	1		
R246	ERD25TJ103	Carbon Resistor, 10KΩ, ¼W	1		
R247	ERD25TJ103	Carbon Resistor, 10KΩ, ¼W	1		
R248	ERD25TJ103	Carbon Resistor, 10KΩ, ¼W	1		
R249	ERD25TJ684	Carbon Resistor, 680KΩ, ¼W	1		
R250	ERD25TJ684	Carbon Resistor, 680KΩ, ¼W	1		
R251	ERD25TJ103	Carbon Resistor, 10KΩ, ¼W	1		
R252	ERD25TJ103	Carbon Resistor, 10KΩ, ¼W	1		
R253	ERD25TJ101	Carbon Resistor, 100Ω, ¼W	1		
R254	ERD25TJ101	Carbon Resistor, 100Ω, ¼W	1		
R255	ERD25TJ155	Carbon Resistor, 1.5MΩ, ¼W	1		
R256	ERD25TJ155	Carbon Resistor, 1.5MΩ, ¼W	1		
R257	ERD25TJ103	Carbon Resistor, 10KΩ, ¼W	1		
R258	ERD25TJ103	Carbon Resistor, 10KΩ, ¼W	1		
R259	ERD25TJ152	Carbon Resistor, 1.5KΩ, ¼W	1		
R260	ERD25TJ152	Carbon Resistor, 1.5KΩ, ¼W	1		
R261	ERD25TJ222	Carbon Resistor, 2.2KΩ, ¼W	1		
R262	ERD25TJ222	Carbon Resistor, 2.2KΩ, ¼W	1		
R263	ERD25TJ153	Carbon Resistor, 15KΩ, ¼W	1		
R264	ERD25TJ153	Carbon Resistor, 15KΩ, ¼W	1		
R265	ERD25TJ684	Carbon Resistor, 680KΩ, ¼W	1		
R266	ERD25TJ684	Carbon Resistor, 680KΩ, ¼W	1		
R267	ERD25TJ221	Carbon Resistor, 220Ω, ¼W	1		
R269	ERD25TJ682	Carbon Resistor, 6.8KΩ, ¼W	1		
R270	ERD25TJ682	Carbon Resistor, 6.8KΩ, ¼W	1		
R271	ERD25TJ682	Carbon Resistor, 6.8KΩ, ¼W	1		
R272	ERD25TJ682	Carbon Resistor, 6.8KΩ, ¼W	1		
R273	ERD25TJ333	Carbon Resistor, 33KΩ, ¼W	1		
R274	ERD25TJ333	Carbon Resistor, 33KΩ, ¼W	1		
R275	ERD25TJ102	Carbon Resistor, 1KΩ, ¼W	1		
R276	ERD25TJ102	Carbon Resistor, 1KΩ, ¼W	1		
R277	ERD25TJ223	Carbon Resistor, 22KΩ, ¼W	1		
R278	ERD25TJ102	Carbon Resistor, 1KΩ, ¼W	1		
R279	ERD25TJ473	Carbon Resistor, 47KΩ, ¼W	1		
R280	ERD25TJ473	Carbon Resistor, 47KΩ, ¼W	1		
R281	ERD25TJ151	Carbon Resistor, 150Ω, ¼W	1		
R282	ERD25TJ151	Carbon Resistor, 150Ω, ¼W	1		
R283	ERD25TJ472	Carbon Resistor, 4.7KΩ, ¼W	1		
R284	ERD25TJ472	Carbon Resistor, 4.7KΩ, ¼W	1		
R285	ERD25TJ101	Carbon Resistor, 100Ω, ¼W	1		
R286	ERD25TJ100	Carbon Resistor, 10Ω, ¼W	1		
R301	ERD25TJ472	Carbon Resistor, 4.7KΩ, ¼W	1		
R302	ERD25TJ472	Carbon Resistor, 4.7KΩ, ¼W	1		
R303	ERD25TJ222	Carbon Resistor, 2.2KΩ, ¼W	1		
R304	ERD25TJ222	Carbon Resistor, 2.2KΩ, ¼W	1		
R305	ERD25TJ100	Carbon Resistor, 10Ω, ¼W	1		
R306	ERD25TJ100	Carbon Resistor, 10Ω, ¼W	1		
R307	ERD25TJ2R2	Carbon Resistor, 2.2Ω, ¼W	1		
R308	ERD25TJ683	Carbon Resistor, 68KΩ, ¼W	1		
R309	ERD25TJ683	Carbon Resistor, 68KΩ, ¼W	1		
R310	ERD25TJ472	Carbon Resistor, 4.7KΩ, ¼W	1		
R311	ERD25TJ223	Carbon Resistor, 22KΩ, ¼W	1		
R312	ERD25TJ154	Carbon Resistor, 150KΩ, ¼W	1		
R313	ERD25TJ154	Carbon Resistor, 150KΩ, ¼W	1		
R314	ERD25TJ822	Carbon Resistor, 8.2KΩ, ¼W	1		

5

Ref. No.	Part No.	Part Name & Description	Per Set		Remarks
R315	ERD25TJ822	Carbon Resistor, 8.2KΩ, ¼W	1		
R316	ERD25TJ103	Carbon Resistor, 10KΩ, ¼W	1		
R317	ERD25TJ103	Carbon Resistor, 10KΩ, ¼W	1		
R318	ERD25TJ103	Carbon Resistor, 10KΩ, ¼W	1		
R319	ERD25TJ103	Carbon Resistor, 10KΩ, ¼W	1		
R320	ERD25TJ684	Carbon Resistor, 680KΩ, ¼W	1		
R321	ERD25TJ684	Carbon Resistor, 680KΩ, ¼W	1		
R322	ERD25TJ331	Carbon Resistor, 330Ω, ¼W	1		
R323	ERD25TJ104	Carbon Resistor, 100KΩ, ¼W	1		
R324	ERD25TJ104	Carbon Resistor, 100KΩ, ¼W	1		
R325	ERD25TJ473	Carbon Resistor, 47KΩ, ¼W	1		
R326	ERD25TJ473	Carbon Resistor, 47KΩ, ¼W	1		
R327	ERD25TJ474	Carbon Resistor, 470KΩ, ¼W	1		
R328	ERD25TJ474	Carbon Resistor, 470KΩ, ¼W	1		
R329	ERD25TJ155	Carbon Resistor, 1.5MΩ, ¼W	1		
R330	ERD25TJ155	Carbon Resistor, 1.5MΩ, ¼W	1		
R331	ERD25TJ183	Carbon Resistor, 18KΩ, ¼W	1		
R332	ERD25TJ183	Carbon Resistor, 18KΩ, ¼W	1		
R333	ERD25TJ331	Carbon Resistor, 330Ω, ¼W	1		
R334	ERD25TJ331	Carbon Resistor, 330Ω, ¼W	1		
R335	ERD25TJ682	Carbon Resistor, 6.8KΩ, ¼W	1		
R336	ERD25TJ682	Carbon Resistor, 6.8KΩ, ¼W	1		
R337	ERD25TJ682	Carbon Resistor, 6.8KΩ, ¼W	1		
R338	ERD25TJ682	Carbon Resistor, 6.8KΩ, ¼W	1		
R339	ERD25TJ473	Carbon Resistor, 47KΩ, ¼W	1		
R340	ERD25TJ473	Carbon Resistor, 47KΩ, ¼W	1		
R341	ERD25TJ154	Carbon Resistor, 150KΩ, ¼W	1		
R342	ERD25TJ154	Carbon Resistor, 150KΩ, ¼W	1		
R343	ERD25TJ103	Carbon Resistor, 10KΩ, ¼W	1		
R344	ERD25TJ103	Carbon Resistor, 10KΩ, ¼W	1		
R345	ERD25TJ682	Carbon Resistor, 6.8KΩ, ¼W	1		
R346	ERD25TJ682	Carbon Resistor, 6.8KΩ, ¼W	1		
R347	ERD25TJ103	Carbon Resistor, 10KΩ, ¼W	1		
R348	ERD25TJ103	Carbon Resistor, 10KΩ, ¼W	1		
R349	ERD25TJ151	Carbon Resistor, 150Ω, ¼W	1		
R350	ERD25TJ151	Carbon Resistor, 150Ω, ¼W	1		
R351	ERD25TJ680	Carbon Resistor, 68Ω, ¼W	1		
R352	ERD25TJ680	Carbon Resistor, 68Ω, ¼W	1		
R353	ERD25TJ155	Carbon Resistor, 1.5MΩ, ¼W	1		
R354	ERD25TJ155	Carbon Resistor, 1.5MΩ, ¼W	1		
R355	ERD25TJ472	Carbon Resistor, 4.7KΩ, ¼W	1		
R356	ERD25TJ472	Carbon Resistor, 4.7KΩ, ¼W	1		
R357	ERD25TJ332	Carbon Resistor, 3.3KΩ, ¼W	1		
R358	ERD25TJ332	Carbon Resistor, 3.3KΩ, ¼W	1		
R359	ERD25TJ682	Carbon Resistor, 6.8KΩ, ¼W	1		
R360	ERD25TJ682	Carbon Resistor, 6.8KΩ, ¼W	1		
R361	ERD25TJ472	Carbon Resistor, 4.7KΩ, ¼W	1		
R362	ERD25TJ472	Carbon Resistor, 4.7KΩ, ¼W	1		
R363	ERD25TJ683	Carbon Resistor, 68KΩ, ¼W	1		
R364	ERD25TJ473	Carbon Resistor, 47KΩ, ¼W	1		
R365	ERD25TJ103	Carbon Resistor, 10KΩ, ¼W	1		
R366	ERD25TJ474	Carbon Resistor, 470KΩ, ¼W	1		
R367	ERD25TJ474	Carbon Resistor, 470KΩ, ¼W	1		
R368	ERD25TJ152	Carbon Resistor, 1.5KΩ, ¼W	1		
R369	ERD25TJ152	Carbon Resistor, 1.5KΩ, ¼W	1		
R370	ERD25TJ222	Carbon Resistor, 2.2KΩ, ¼W	1		
R371	ERD25TJ222	Carbon Resistor, 2.2KΩ, ¼W	1		

6

Ref. No.	Part No.	Part Name & Description	Per Set		Remarks
R372	**ERD25TJ223**	Carbon Resistor, 22KΩ, ¼W	1		
R373	**ERD25TJ683**	Carbon Resistor, 68KΩ, ¼W	1		
R374	**ERD25TJ682**	Carbon Resistor, 6.8KΩ, ¼W	1		
R375	**ERD25TJ682**	Carbon Resistor, 6.8KΩ, ¼W	1		
R376	**ERD25TJ682**	Carbon Resistor, 6.8KΩ, ¼W	1		
R377	**ERD25TJ103**	Carbon Resistor, 10KΩ, ¼W	1		
R378	**ERD25TJ680**	Carbon Resistor, 68Ω, ¼W	1		
R379	**ERD25TJ682**	Carbon Resistor, 6.8KΩ, ¼W	1		
R380	**ERD25TJ222**	Carbon Resistor, 2.2KΩ, ¼W	1		
R381	**ERG2ANJ470**	Metal Oxide Resistor, 47Ω, 2W	1		
R382	**ERD25TJ272**	Carbon Resistor, 2.7KΩ, ¼W	1		
R383	**ERD25TJ223**	Carbon Resistor, 22KΩ, ¼W	1		
R384	**ERD25TJ222**	Carbon Resistor, 2.2KΩ, ¼W	1		
R385	**ERD25TJ220**	Carbon Resistor, 22Ω, ¼W	1		
R386	**ERD25TJ102**	Carbon Resistor, 1KΩ, ¼W	1		
R387	**ERD25TJ102**	Carbon Resistor, 1KΩ, ¼W	1		
R388	**ERD25TJ472**	Carbon Resistor, 4.7KΩ, ¼W	1		
R389	**ERD25TJ104**	Carbon Resistor, 100KΩ, ¼W	1		
R390	**ERD25TJ680**	Carbon Resistor, 68Ω, ¼W	1		
R391	**ERD25TJ103**	Carbon Resistor, 10KΩ, ¼W	1		
R392	**ERD25TJ473**	Carbon Resistor, 47KΩ, ¼W	1		
R393	**ERD25TJ473**	Carbon Resistor, 47KΩ, ¼W	1		
R394	**ERX1ANJ1R0**	Metal Oxide Resistor, 1Ω, 1W	1		
R395	**ERD25TJ104**	Carbon Resistor, 100KΩ, ¼W	1		
R396	**ERD25TJ154**	Carbon Resistor, 150KΩ, ¼W	1		
R397	**ERD25TJ154**	Carbon Resistor, 150KΩ, ¼W	1		
R398	**ERD25TJ332**	Carbon Resistor, 3.3KΩ, ¼W	1		
R399	**ERD25TJ103**	Carbon Resistor, 10KΩ, ¼W	1		
R400	**ERD25TJ151**	Carbon Resistor, 150Ω, ¼W	1		
R401	**ERD25TJ103**	Carbon Resistor, 10KΩ, ¼W	1		
R402	**ERD25TJ102**	Carbon Resistor, 1KΩ, ¼W	1		
R403	**ERD25TJ333**	Carbon Resistor, 33KΩ, ¼W	1		
R404	**ERD25TJ103**	Carbon Resistor, 10KΩ, ¼W	1		
R405	**ERD25TJ680**	Carbon Resistor, 68Ω, ¼W	1		
R406	**ERD25TJ102**	Carbon Resistor, 1KΩ, ¼W	1		
R407	**ERD25TJ103**	Carbon Resistor, 10KΩ, ¼W	1		
R408	**ERD25TJ332**	Carbon Resistor, 3.3KΩ, ¼W	1		
R412	**ERD25TJ473**	Carbon Resistor, 47KΩ, ¼W	1		
R415	**ERD25TJ103**	Carbon Resistor, 10KΩ, ¼W	1		
R430	**ERD25TJ222**	Carbon Resistor, 2.2KΩ, ¼W	1		
R431	**ERD25TJ222**	Carbon Resistor, 2.2KΩ, ¼W	1		
R432	**ERD25TJ104**	Carbon Resistor, 100KΩ, ¼W	1		
R433	**ERD25TJ102**	Carbon Resistor, 1KΩ, ¼W	1		
R435	**ERD25TJ472**	Carbon Resistor, 4.7KΩ, ¼W	1		
R501	**ERD25TJ222**	Carbon Resistor, 2.2KΩ, ¼W	1		
R502	**ERD25TJ222**	Carbon Resistor, 2.2KΩ, ¼W	1		
R503	**ERD25TJ102**	Carbon Resistor, 1KΩ, ¼W	1		
R504	**ERD25TJ102**	Carbon Resistor, 1KΩ, ¼W	1		
R505	**ERD25TJ472**	Carbon Resistor, 4.7KΩ, ¼W	1		
R506	**ERD25TJ472**	Carbon Resistor, 4.7KΩ, ¼W	1		
R507	**ERD25TJ103**	Carbon Resistor, 10KΩ, ¼W	1		
R508	**ERC14GK226**	Solid Resistor, 22MΩ, ¼W	1		
R509	**ERC14GK226**	Solid Resistor, 22MΩ, ¼W	1		

Ref. No.	Part No.	Part Name & Description	Per Set		Remarks
		VARIABLE RESISTORS			
VR101	EVNM4AA00B53	Preset, Pilot Circuit, 5KΩ	1		
VR102	**EVNM4AA00B13**	Preset, Separation Control, 1KΩ	1		
VR103,104	RVV54A80	Volume, 50KΩ (A)	1		
VR105	**EVLT4AA00B15**	Preset, Meter Adjust, 100KΩ	1		
VR201,202	RVV14B82	Recording, 10KΩ (B)	2		
VR203,204, 205,206	RVV15B53	Tone, 100KΩ (B)	2		
VR207	RVV54G81	Balance, 50KΩ (G)	1		
VR208,303, 304	**EVNK4AA00B14**	Preset, Meter & Erase Bias Adjust, 10KΩ	3		
VR301,302	EVNM4AA00B15	Preset, Recording Bias Adjust, 100KΩ	2		
VR501	**EVLT4AA00B54**	Preset, Bias Adjust, 50KΩ	1		
		CAPACITORS			
C1	**ECEA1CS221**	Electrolytic Capacitor, 220μF	1		
C2	**ECEA50Y3R3**	Electrolytic Capacitor, 3.3μF	1		
C3	**ECEA50Y3R3**	Electrolytic Capacitor, 3.3μF	1		
C4	ECKD1H223MD	Ceramic Capacitor, 0.022μF	1		
C101	ECCD1H390K	Ceramic Capacitor, 39PF	1		
C102	ECCD1H180K	Ceramic Capacitor, 18PF	1		
C103	ECCD1H010C	Ceramic Capacitor, 1PF	1		
C106	ECQS05102KZ	Polystylene Capacitor, 1000PF	1		
C107	ECCD1H101K	Ceramic Capacitor, 100PF	1		
C108	ECCD1H120K	Ceramic Capacitor, 12PF	1		
C109	ECKD1H223ZF	Ceramic Capacitor, 0.022μF	1		
C110	ECKD1H223ZF	Ceramic Capacitor, 0.022μF	1		
C111	ECCD1H100KC	Ceramic Capacitor, 10PF	1		
C112	ECKD1H102MD	Ceramic Capacitor, 0.001μF	1		
C113	ECKD1H102ZF	Ceramic Capacitor, 0.001μF	1		
C114	ECCD1H220KC	Ceramic Capacitor, 22PF	1		
C115	ECCD1H100KC	Ceramic Capacitor, 10PF	1		
C116	ECCD1H070D	Ceramic Capacitor, 7PF	1		
C117	ECCD1H020C	Ceramic Capacitor, 2PF	1		
C118	ECKD1H102MD	Ceramic Capacitor, 0.001μF	1		
C119	ECCD1H150KC	Ceramic Capacitor, 15PF	1		
C120	ECCD1H150KC	Ceramic Capacitor, 15PF	1		
C123	ECQS05821JZ	Polystylene Capacitor, 820PF	1		
C124	ECQS05332KZ	Polystylene Capacitor, 3300PF	1		
C125	ECQS05122KZ	Polystylene Capacitor, 1200PF	1		
C126	ECQS05391JZ	Polystylene Capacitor, 390PF	1		
C127	ECCD1H030C	Ceramic Capacitor, 3PF	1		
C128	ECCD1H150KV	Ceramic Capacitor, 15PF	1		
C129	ECCD1H010C	Ceramic Capacitor, 1PF	1		
C130	ECKD1H223ZF	Ceramic Capacitor, 0.022μF	1		
C131	**ECEA1HS100**	Electrolytic Capacitor, 10μF	1		
C132	ECCD1H070D	Ceramic Capacitor, 7PF	1		
C133	ECKD1H223ZF	Ceramic Capacitor, 0.022μF	1		
C134	**ECEA1CS330**	Electrolytic Capacitor, 33μF	1		
C135	ECKD1H223ZF	Ceramic Capacitor, 0.022μF	1		
C136	ECKD1H223ZF	Ceramic Capacitor, 0.022μF	1		
C137	ECCD1H560K	Ceramic Capacitor, 56PF	1		
C138	ECKD1H223ZF	Ceramic Capacitor, 0.022μF	1		

Ref. No.	Part No.	Part Name & Description	Per Set	Remarks
C139	ECKD1H682MD	Ceramic Capacitor, 0.0068μF	1	
C140	ECQS05152KZ	Polystylene Capacitor, 1500PF	1	
C141	**ECEA1AS101**	Electrolytic Capacitor, 100μF	1	
C142	**ECEA1AS221**	Electrolytic Capacitor, 220μF	1	
C143	ECKD1H103ZF	Ceramic Capacitor, 0.01μF	1	
C144	ECKD1H223ZF	Ceramic Capacitor, 0.022μF	1	
C145	**ECEA50ZR22**	Electrolytic Capacitor, 0.22μF	1	
C146	**ECEA50ZR47**	Electrolytic Capacitor, 0.47μF	1	
C147	**ECEA1HS100**	Electrolytic Capacitor, 10μF	1	
C148	ECKD1H103ZF	Ceramic Capacitor, 0.01μF	1	
C149	**ECEA1JS4R7**	Electrolytic Capacitor, 4.7μF	1	
C150	ECKD1H223ZF	Ceramic Capacitor, 0.022μF	1	
C151	**ECEA1HS100**	Electrolytic Capacitor, 10μF	1	
C152	ECFVD683MD	Semi-Conductor Capacitor, 0.068μF	1	
C153	ECFVD683MD	Semi-Conductor Capacitor, 0.068μF	1	
C154	**ECEA1AS221**	Electrolytic Capacitor, 220μF	1	
C155	ECFVD333MD	Semi-Conductor Capacitor, 0.033μF	1	
C156	ECFVD223MD	Semi-Conductor Capacitor, 0.022μF	1	
C157	ECKD1H223ZF	Ceramic Capacitor, 0.022μF	1	
C158	ECKD1H223ZF	Ceramic Capacitor, 0.022μF	1	
C159	**ECEA1HS100**	Electrolytic Capacitor, 10μF	1	
C160	**ECEA1AS221**	Electrolytic Capacitor, 220μF	1	
C161	ECKD1H223ZF	Ceramic Capacitor, 0.022μF	1	
C162	ECKD1H471KB	Ceramic Capacitor, 470PF	1	
C163	**ECEA1AS101**	Electrolytic Capacitor, 100μF	1	
C164	ECKD1H223ZF	Ceramic Capacitor, 0.022μF	1	
C165	ECKD1H223ZF	Ceramic Capacitor, 0.022μF	1	
C166	**ECEA2AS010**	Electrolytic Capacitor, 1μF	1	
C167	ECKD1H223ZF	Ceramic Capacitor, 0.022μF	1	
C168	**ECEA50N1**	Electrolytic Capacitor, 1μF	1	
C169	ECKD1H471KB	Ceramic Capacitor, 470PF	1	
C170	**ECEA1JS4R7**	Electrolytic Capacitor, 4.7μF	1	
C171	**ECEA2AS010**	Electrolytic Capacitor, 1μF	1	
C172	ECKD1H223ZF	Ceramic Capacitor, 0.022μF	1	
C173	ECKD1H223ZF	Ceramic Capacitor, 0.022μF	1	
C174	ECCD1H070D	Ceramic Capacitor, 7PF	1	
C176	ECCD1H100KC	Ceramic Capacitor, 10PF	1	
C177	ECKD1H223ZF	Ceramic Capacitor, 0.022μF	1	
C180	ECKD1H472MD	Ceramic Capacitor, 0.0047μF	1	
C182	ECCD1H050CC	Ceramic Capacitor, 5PF	1	
C201	**ECEA2AS010**	Electrolytic Capacitor, 1μF	1	
C202	**ECEA2AS010**	Electrolytic Capacitor, 1μF	1	
C203	ECCD1H101K	Ceramic Capacitor, 100PF	1	
C204	ECCD1H101K	Ceramic Capacitor, 100PF	1	
C205	**ECEA1AS470**	Electrolytic Capacitor, 47μF	1	
C206	**ECEA1AS470**	Electrolytic Capacitor, 47μF	1	
C207	ECKD1H103MD	Ceramic Capacitor, 0.01μF	1	
C208	ECKD1H103MD	Ceramic Capacitor, 0.01μF	1	
C209	ECFVD333MD	Semi-Conductor Capacitor, 0.033μF	1	
C210	ECFVD333MD	Semi-Conductor Capacitor, 0.033μF	1	
C211	**ECEA1ES101**	Electrolytic Capacitor, 100μF	1	
C213	ECKD1H333ZF	Ceramic Capacitor, 0.033μF	1	
C214	ECKD1H333ZF	Ceramic Capacitor, 0.033μF	1	
C215	ECKD1H333ZF	Ceramic Capacitor, 0.033μF	1	
C216	ECKD1H333ZF	Ceramic Capacitor, 0.033μF	1	
C217	ECKD1H102ZF	Ceramic Capacitor, 0.001μF	1	
C218	ECKD1H102ZF	Ceramic Capacitor, 0.001μF	1	

Ref. No.	Part No.	Part Name & Description	Per Set	Remarks
C219	**ECEA1HS100**	Electrolytic Capacitor, 10μF	1	
C220	**ECEA1HS100**	Electrolytic Capacitor, 10μF	1	
C221	**ECEA2AS010**	Electrolytic Capacitor, 1μF	1	
C222	**ECEA2AS010**	Electrolytic Capacitor, 1μF	1	
C223	ECKD1H472MD	Ceramic Capacitor, 0.0047μF	1	
C224	ECKD1H472MD	Ceramic Capacitor, 0.0047μF	1	
C225	ECFVD333MD	Semi-Conductor Capacitor, 0.033μF	1	
C226	ECFVD333MD	Semi-Conductor Capacitor, 0.033μF	1	
C227	ECFVD333MD	Semi-Conductor Capacitor, 0.033μF	1	
C228	ECFVD333MD	Semi-Conductor Capacitor, 0.033μF	1	
C229	ECKD1H222MD	Ceramic Capacitor, 0.0022μF	1	
C230	ECKD1H222MD	Ceramic Capacitor, 0.0022μF	1	
C231	**ECEA2AS010**	Electrolytic Capacitor, 1μF	1	
C232	**ECEA2AS010**	Electrolytic Capacitor, 1μF	1	
C233	**ECEA2AS010**	Electrolytic Capacitor, 1μF	1	
C234	**ECEA2AS010**	Electrolytic Capacitor, 1μF	1	
C235	ECKD1H223ZF	Ceramic Capacitor, 0.022μF	1	
C236	ECKD1H223ZF	Ceramic Capacitor, 0.022μF	1	
C237	ECKD1H472MD	Ceramic Capacitor, 0.0047μF	1	
C238	ECKD1H472MD	Ceramic Capacitor, 0.0047μF	1	
C239	ECFVD473MD	Semi-Conductor Capacitor, 0.047μF	1	
C240	ECFVD473MD	Semi-Conductor Capacitor, 0.047μF	1	
C241	**ECEA1CS102**	Electrolytic Capacitor, 1000μF	1	
C243	**ECEA50ZR33**	Electrolytic Capacitor, 0.33μF	1	
C244	**ECEA50ZR33**	Electrolytic Capacitor, 0.33μF	1	
C245	ECKD1H471KB	Ceramic Capacitor, 470PF	1	
C246	ECKD1H471KB	Ceramic Capacitor, 470PF	1	
C247	**ECEA1AS101**	Electrolytic Capacitor, 100μF	1	
C248	**ECEA1ES471**	Electrolytic Capacitor, 470μF	1	
C249	**ECEA1AS101**	Electrolytic Capacitor, 100μF	1	
C250	**ECEA2AS010**	Electrolytic Capacitor, 1μF	1	
C251	**ECEA1AS221**	Electrolytic Capacitor, 220μF	1	
C252	**ECEA1CS222**	Electrolytic Capacitor, 2200μF	1	
C253	ECCD1H101K	Ceramic Capacitor, 100PF	1	
C254	ECCD1H101K	Ceramic Capacitor, 100PF	1	
C255	**ECEA1AS101**	Electrolytic Capacitor, 100μF	1	
C257	**ECEA50ZR47**	Electrolytic Capacitor, 0.47μF	1	
C258	**ECEA50ZR47**	Electrolytic Capacitor, 0.47μF	1	
C259	**ECEA1CS330**	Electrolytic Capacitor, 33μF	1	
C260	**ECEA1CS330**	Electrolytic Capacitor, 33μF	1	
C261	ECCD1H470K	Ceramic Capacitor, 47PF	1	
C262	ECCD1H470K	Ceramic Capacitor, 47PF	1	
C263	**ECEA1AS470**	Electrolytic Capacitor, 47μF	1	
C264	**ECEA1AS470**	Electrolytic Capacitor, 47μF	1	
C265	ECQG05224MZ	Polystylene Capacitor, 0.22μF	1	
C266	ECQG05224MZ	Polystylene Capacitor, 0.22μF	1	
C267	**ECEA1CS221**	Electrolytic Capacitor, 220μF	1	
C269	**ECEA1AS102**	Electrolytic Capacitor, 1000μF	1	
C270	**ECEA1AS102**	Electrolytic Capacitor, 1000μF	1	
C271	ECKD1H471KB	Ceramic Capacitor, 470PF	1	
C272	ECKD1H471KB	Ceramic Capacitor, 470PF	1	
C273	**ECEA1HS100**	Electrolytic Capacitor, 10μF	1	
C274	ECKD1H103ZF	Ceramic Capacitor, 0.01μF	1	
C275	**ECEA50ZR22**	Electrolytic Capacitor, 0.22μF	1	
C276	**ECEA50ZR22**	Electrolytic Capacitor, 0.22μF	1	
C301	**ECEA50ZR1**	Electrolytic Capacitor, 0.1μF	1	
C302	**ECEA50ZR1**	Electrolytic Capacitor, 0.1μF	1	

Ref. No.	Part No.	Part Name & Description	Per Set		Remarks
C303	ECFVD223MD	Semi-Conductor Capacitor, 0.022μF	1		
C304	ECFVD223MD	Semi-Conductor Capacitor, 0.022μF	1		
C305	ECCD1H470K	Ceramic Capacitor, 47PF	1		
C306	ECCD1H470K	Ceramic Capacitor, 47PF	1		
C307	**ECEA1AS101**	Electrolytic Capacitor, 100μF	1		
C308	**ECEA1CS330**	Electrolytic Capacitor, 33μF	1		
C309	ECKD1H681KB	Ceramic Capacitor, 680PF	1		
C310	ECKD1H681KB	Ceramic Capacitor, 680PF	1		
C311	**ECEA1HS100**	Electrolytic Capacitor, 10μF	1		
C312	**ECEA1HS100**	Electrolytic Capacitor, 10μF	1		
C313	ECKD1H102MD	Ceramic Capacitor, 0.001μF	1		
C314	ECKD1H102MD	Ceramic Capacitor, 0.001μF	1		
C315	ECCD1H470K	Ceramic Capacitor, 47PF	1		
C316	ECCD1H470K	Ceramic Capacitor, 47PF	1		
C317	ECKD1H102MD	Ceramic Capacitor, 0.001μF	1		
C318	ECKD1H102MD	Ceramic Capacitor, 0.001μF	1		
C319	ECKD1H102MD	Ceramic Capacitor, 0.001μF	1		
C320	ECKD1H102MD	Ceramic Capacitor, 0.001μF	1		
C321	ECFVD153MD	Semi-Conductor Capacitor, 0.015μF	1		
C322	ECFVD153MD	Semi-Conductor Capacitor, 0.015μF	1		
C323	**ECEA1ES470**	Electrolytic Capacitor, 47μF	1		
C324	**ECEA1ES470**	Electrolytic Capacitor, 47μF	1		
C325	ECKD1H102MD	Ceramic Capacitor, 0.001μF	1		
C326	ECKD1H102MD	Ceramic Capacitor, 0.001μF	1		
C327	ECCD1H101K	Ceramic Capacitor, 100PF	1		
C328	ECCD1H101K	Ceramic Capacitor, 100PF	1		
C329	**ECEA1ES101**	Electrolytic Capacitor, 100μF	1		
C330	**ECEA1AS101**	Electrolytic Capacitor, 100μF	1		
C331	**ECEA2AS010**	Electrolytic Capacitor, 1μF	1		
C332	**ECEA2AS010**	Electrolytic Capacitor, 1μF	1		
C333	**ECEA1JS4R7**	Electrolytic Capacitor, 4.7μF	1		
C334	**ECEA1JS4R7**	Electrolytic Capacitor, 4.7μF	1		
C335	ECKD1H332MD	Ceramic Capacitor, 0.0033μF	1		
C336	ECKD1H332MD	Ceramic Capacitor, 0.0033μF	1		
C337	**ECEA50ZR22**	Electrolytic Capacitor, 0.22μF	1		
C338	**ECEA50ZR22**	Electrolytic Capacitor, 0.22μF	1		
C339	ECKD1H682MD	Ceramic Capacitor, 0.0068μF	1		
C340	ECKD1H682MD	Ceramic Capacitor, 0.0068μF	1		
C341	ECQG05822KZ	Polystylene Capacitor, 0.0082μF	1		
C342	ECQG05822KZ	Polystylene Capacitor, 0.0082μF	1		
C343	**ECEA1HS100**	Electrolytic Capacitor, 10μF	1		
C344	**ECEA1HS100**	Electrolytic Capacitor, 10μF	1		
C345	**ECEA2AS010**	Electrolytic Capacitor, 1μF	1		
C346	**ECEA2AS010**	Electrolytic Capacitor, 1μF	1		
C347	ECCD1H101K	Ceramic Capacitor, 100PF	1		
C348	ECCD1H101K	Ceramic Capacitor, 100PF	1		
C349	**ECEA2AS010**	Electrolytic Capacitor, 1μF	1		
C350	**ECEA2AS010**	Electrolytic Capacitor, 1μF	1		
C351	**ECEA2AS010**	Electrolytic Capacitor, 1μF	1		
C352	**ECEA2AS010**	Electrolytic Capacitor, 1μF	1		
C353	**ECEA1HS100**	Electrolytic Capacitor, 10μF	1		
C354	**ECEA1HS100**	Electrolytic Capacitor, 10μF	1		
C355	**ECEA1ES101**	Electrolytic Capacitor, 100μF	1		
C356	ECQS1103KZ	Polystylene Capacitor, 0.01μF	1		○
C357	**ECEA1CS221**	Electrolytic Capacitor, 220μF	1		
C358	ECQG05153MZ	Polystylene Capacitor, 0.015μF	1		
C359	ECQG05473MZ	Polystylene Capacitor, 0.047μF	1		

Ref. No.	Part No.	Part Name & Description	Per Set		Remarks
C360	**ECEA1ES470**	Electrolytic Capacitor, 47μF	1		
C361	**ECEA1ES470**	Electrolytic Capacitor, 47μF	1		
C362	**ECEA2AS010**	Electrolytic Capacitor, 1μF	1		
C363	**ECEA1CS221**	Electrolytic Capacitor, 220μF	1		
C364	ECKD1H102MD	Ceramic Capacitor, 0.001μF	1		
C365	ECCD1H101K	Ceramic Capacitor, 100PF	1		
C366	**ECEA50ZR22**	Electrolytic Capacitor, 0.22μF	1		
C367	**ECEA2AS010**	Electrolytic Capacitor, 1μF	1		
C368	**ECEA1CS330**	Electrolytic Capacitor, 33μF	1		
C369	**ECEA2AS2R2**	Electrolytic Capacitor, 2.2μF	1		
C370	**ECEA1HS100**	Electrolytic Capacitor, 10μF	1		
C371	**ECEA1AS101**	Electrolytic Capacitor, 100μF	1		
C372	**ECEA1HS100**	Electrolytic Capacitor, 10μF	1		
C373	**ECEA2AS010**	Electrolytic Capacitor, 1μF	1		
C374	**ECEA2AS010**	Electrolytic Capacitor, 1μF	1		
C380	**ECEA1CS221**	Electrolytic Capacitor, 220μF	1		
C501	ECKD1H103ZF	Ceramic Capacitor, 0.01μF	1		
C502	ECKD1H103ZF	Ceramic Capacitor, 0.01μF	1		
C503	ECKD1H103ZF	Ceramic Capacitor, 0.01μF	1		
C504	ECKD1H103ZF	Ceramic Capacitor, 0.01μF	1		
C505	**ECEA1HS100**	Electrolytic Capacitor, 10μF	1		
C506	**ECEA1HS100**	Electrolytic Capacitor, 10μF	1		
		VARIABLE CAPACITORS			
CV101,102, 103,104, 105	RCVCV55J139	Tuning Capacitor, W/Trimmer Capacitor (CT101,102)	1		○
CT103,104, 105,106, 108,109, 110,111	RCV1PX10AGS	Trimmer Capacitor	8		
CT107	RCV1PX20AGS	Trimmer Capacitor	1		
		CERAMIC FILTERS			
CF101,102	RVFCF10M12FR	Ceramic Filter	2		
CF103	RVFSFZ455B	Ceramic Filter	1		○
		TRANSISTORS			
TR101	2SK49	Transistor	1		
TR102,103	2SC1675	Transistor	2		
TR104,201, 202,203, 204,205, 206,207, 208,209, 210,211, 303,304, 307,308	2SC945	Transistor	16		
TR105,106, 301,302, 305,306,	2SC828	Transistor	14		

Ref. No.	Part No.	Part Name & Description	Per Set		Remarks
309,310, 311,312, 316,318, 319,322					
TR212	2SC2001	Transistor	1		
TR313,317, 320	2SA564	Transistor	3		
TR314,321	2SC1383	Transistor	2		
TR315	2SA683	Transistor	1		
INTEGRATED CIRCUITS					
IC101	AN7210	IC	1		
IC102	AN7211	IC	1		
IC103	RVILA3350A	IC	1		
IC201	AN7145M	IC (Si)	1		O
IC301,302	RVITA7137PST	IC (Si)	2		O
IC303	RVIUPC566H3	IC	1		
DIODES					
D1,2,309,310, 506,507,508 509	**SM112**	Diode	7		
D3,4,103,104, 105	**MA161**	Diode	5		
D101,102,301 302,303,304 305,306	**OA90M**	Diode	8		
D201	**RVDRD7R5FB**	Diode	1		
D307,308	RVDKB262D	Diode	2		
D501,502,503 504,505	RVDGL31AR	Diode	5		
THERMISTORS					
TH101	RRT103	Thermistor	1		
TH301	RRT251	Thermistor	1		
TRANSFORMERS					
T1	**RLT5W22**	Power Transformer	1		O
T101,104	**RLI4M101**	FM IFT	2		
T102	RLI2M213	AM IFT	1		
T103	**RLI2M205**	AM IFT	1		
COILS					
L2	RLF5F86	Antenna Coil	1		O
L101	SLA4N2	Antenna Coil, FM	1		
L102	RLD4N30	Tuning Coil, FM	1		
L103	SLO4N12	Oscillator Coil, FM	1		
L105	RLA3M25	Antenna Coil, SW2	1		
L106,110	RLA3M41	Antenna, Oscillator Coil	2		O
L107	RLO2M14	Oscillator Coil, MW	1		
L108	RLO3M32	Oscillator Coil, SW1	1		

Ref. No.	Part No.	Part Name & Description	Per Set		Remarks
L109	RLO3M58	Oscillator Coil, SW2	1		O
L303,304,311	RLM1X1	Trap Coil	1		
L301,302	RLE5004	Trap Coil	2		
L305	RLO9C19	Oscillator Coil	1		O
COMPONENT COMBINATIONS					
Z101,102	EXEM675F	Component Combination	2		
SWITCHES					
S1-1~S1-10	RWSS4360FTX	Slide Switch Assembly, Band Selector	1		O
S2-1,S2-2	RST51V	Lever Switch, FM Mode/Muting	1		
S3	RSH75Z	Leaf Switch, AM Muting	1		
S4-1~S4-3 S6-1~S6-3	RST53W	Lever Switch, Selector, Mode	2		
S5-1~S5-6	RST3F01Z	Lever Switch, Power	1		
S7	RSH2A03Z	Micro Switch, Power	1		O
S8-1~S8-12	RSH2L01Z	Side Switch, Recording-Play	1		O
S9-1~S9-3 S10-1~S10-4	RSH2D01Z	Side Switch, Auto-Manual, EQ	2		
S11,S12	RSH2B03Z	Slide Switch, Bias, Loudness	2		
S13	RSH2B03Y	Slide Switch, Light	1		O
S14-1~S14-6	RSHX007Z	Slide Switch, MPS/OFF/Memory	1		O
S15-1,S15-2	RST51W	Lever Switch, Edit	1		O
S16	RFA1Z	Leaf Switch, Solenoide Time Limit	1		
S17	RFA2Z	Leaf Switch, Rewind on	1		
S18	RFA3Z	Leaf Switch, Tape Power	1		
S19	RFA5Z	Leaf Switch, FF, Rewind on	1		
S20	RFA4Z	Leaf Switch, Play on	1		
S21	(Refer to M42)	Counter Switch (Included in Counter)			
S22	(Refer to E26)	MPS Switch (Included in Plunger Assembly)			
S23	**QSR1403**	**Voltage Select Switch**	1		
S24	(Refer to J12)	AC/DC Select Switch	1		
JACKS					
J1~6	RZES4360FTX	Jack Assembly, Phono In, Line IN, Line Out, Mic, Remote	1		O
J7	RJS139Z	Jack, Rec/PB	1		O
J8,9	**RJJ69A**	Jack, EXT SP	2		
J10	**RJJ109Z**	Jack, Headphone	1		
J11	**RJJ104Z**	Jack, DC IN	1		
J12	**RJJ29Z**	**Jack AC IN**	1		
ELECTRICAL PARTS					
E1	RJH29Z	Head, Record/Playback	1		O
E2	RJH30Z	Head, Erase	1		O
E3	RSM1517Z	Meter, VU	2		O
E4	RSM1517Y	Meter, Tuning	1		O
E5	EAS16P24EH	Speaker, Wofer	2		O
E6	EAS3KH02SA	Speaker, Tweeter	2		O
E7	XAMR48T200	Pilot Lamp, 12V 40mA	2		
E8	XAMR48T250	Pilot Lamp, 12V 40mA	1		

Ref. No.	Part No.	Part Name & Description	Per Set		Remarks
E9	RJS253Y-X	Socket, 3P Connector	16		
E10	RJS216Y-X	Socket, 4P Connector	6		
E11	RJS217Y-X	Socket, 5P Connector	3		
E12	RJS112Y-X	Socket, 6P Connector	10		
E13	RJS219Y-X	Socket, 7P Connector	1		
E14	RJT462Z-X	Terminal, Socket	150		
E15	RBC141Z	Button, EDIT, RECORD, FF & etc.	8		○
E16	RME178Z	Bracket, Chassis	1		○
E17	SDD46K	Drum, Dial	1		
E18	**RDR20-3**	Pulley, Dial	3		
E19	**RDR23-1**	Pulley, Dial	2		
E20	**RDS4090A**	Spring, Dial	1		
E21	**RDZ05A**	Cord(500m), Dial	1 Roll		
E22	RDT9095Z	Shaft, Tuning	1		○
E23	RKE257Z	Jack Board, DC IN, AC IN	1		○
E24	RZQ1S4360FTX	Cassette Slot Assembly	1		○
E25	RZQ2S4360FTX	Piston Cover Assembly	1		○
E26	RSG11Z	Plunger Assembly	1		○
E27	RUS341Z	Lever, Recording Switch	1		○
E28	RUV497Z	Cover, Tape Motor	1		○
E29	RDF227Z	Shaft, Cassette Slot	8		○
E30	RDS5260Z	Spring, Cassette Slot	1		○
E31	RDS5490Z	Spring, Piston	1		○
E32	RHP567Z	Sheet, Cassette Slot	1		○
E33	RHR1016Z	Piston, Cassette Slot	1		○
E34	RHR891Z	Sheet, Piston	1		○
E35	RHG471Z	Rubber, Piston	1		○
E36	RHG101A	Rubber Cushion, Core Antenna	2		
E37	XSN2+10	Screw, Micro Switch M'tg	2		
E38	XSN2+W4	Screw, Recording Lever M'tg	2		
E39	XSN2+6	Screw, DC IN Jack M'tg	2		
E40	XYN3+F8RS	Red Screw, PC Board M'tg	1		
E41	XYN3+F8S	Screw, Tape Deck M'tg	3		
E42	XYNR4+H10S	Screw, Power Transformer M'tg	4		
E43	XTN3+16C	Screw, Tweeter M'tg	4		
E44	XTN26+5F	Screw, EDIT Switch & Plunger M'tg	4		○
E45	XTW3+12F	Screw, Jack Board & Woofer M'tg	8		
E46	XTW3+10FR	Red Screw, Chassis & PC Board M'tg	7		
E47	XTW3+6L	Screw, Tape Deck M'tg	2		
E48	XTW3+6LR	Red Screw, PC Board M'tg	2		
E49	XNS8	Nut, Band Switch, Volume & etc. M'tg	7		
E50	XUC25FW	Circlip, Cassette Slot	8		
E51	RDG5510Z	Cam, Leaf Switch	1		○
E52	RJP137Z	Plug, 3P Connector	17		
E53	RJP107Z	Plug, 4P Connector	6		
E54	RJP116Z	Plug, 5P Connector	3		
E55	RJP142Z	Plug, 6P Connector	10		
E56	RJP119Z	Plug, 7P Connector	1		
E57	**XANR5T25**	Neon Lamp	1		
		CABINET PARTS			
G1	RYMS3460FTX	Cabinet Assembly	1		○
G2	RYFS4360FTX	Cabinet Cover Assembly	1		○
G2-1	RJC111A	Terminal, Battery ⊕ Side	2		

Ref. No.	Part No.	Part Name & Description	Per Set		Remarks
G2-2	RJC505Z	Terminal Spring, Battery ⊖ Side	2		
G2-3	RJT398A	Connecting Pipe, Terminal Spring	2		
G3	RKH88Z	Handle, Cabinet	1		○
G4	RKX130Z	Arm, Handle	2		○
G5	XSB3+6BNS	Screw, Handle M'tg	4		
G6	XYN3+C6S	Screw, Arm M'tg	2		
G7	XWG3F10	Washer, Arm M'tg	2		
G8	RHM58Z	Washer, Arm M'tg	2		
G9	RNW824Z	Washer, Arm M'tg	4		
G10	RMD3014AS	Bracket, Tape Deck	1		
G11	RYQS4360FTX	Cassette Lid Assembly	1		○
G12	RYES4360FTX	Microphone Rest Assembly	2		○
G13	RYGS4360FTX	Microphone Grille Assembly	2		○
G14	XEARS158HA	Telescopic Antenna, 9 steps, 1218mm	2		○
G15	SJF4206	Terminal, EXT. Antenna	2		
G16	RUS344Z	Spring, Microphone Grille	2		
G17	RMD2030Z	Bracket, Microphone	2		○
G18	RDF902B	Shaft, Microphone Grille	2		
G19	RHG468Z	Rubber Holder, Microphone	2		○
G20	XUC15FW	Circlip, Microphone Grille	2		
G21	RUS345Z	Holder, Microphone Rest	2		○
G22	RDP186Z	Pointer, Dial	1		○
G23	RBC140Z	Button, LIGHT, LOUDNES & etc.	5		○
G24	RUS272Z	Spring, Button	5		
G25	SBN555-2	Knob, TONE & BAND	3		
G26	RBN447Z	Knob, VOLUME	1		○
G27	RBN466Z	Knob, TUNING	1		○
G28	RBN431Y	Knob, REC LEVEL & BALANCE	3		○
G29	RBS111Z	Button, MPS	1		
G30	RBE15Z	Knob, SELECTOR, MODE & FM MODE	3		
G31	RBE15Y	Knob, POWER	1		
G32	RHM83Z	Nut, Headphone Jack M'tg	1		○
G33	RHG324Z	Lubber Leg, Cabinet	4		
G34	XTW3+16LFZ	Screw, Cabinet Cover M'tg	3		
G35	XTN4+50B	Screw, Cabinet Cover M'tg	6		
G36	RJM139Z	Condenser Microphone	2		○
G37	RKK138Z	Cover, Battery Compartment	1		○
		ACCESSORIES			
	RJN14Z	Cassette Tape	1		
	RJA21Z	**Power Cord, AC**	1		
	RJP120ZS	**Plug, AC Cord**	1		
	WMEO-300bY	Lead Wire, Antenna	1		
	WMEG-50bY	Lead Wire, Earth	1		
	RQX6237Z	Instruction Book	1		○
		PACKINGS			
	RPP254Z	Polyethylene Cover	1		○
	RPN9261Z	Pad Complete	1		○
	Not Available Order RPN9261Z	Pad, Upper Side	(1)		
		Pad, Lower Side	(1)		
	RPK595Z	Gift Box	1		○

Printed in Japan

Service Manual

Supplement -1

Radio Cassette

Stereo Cassette Recorder **RS-4360DFT**
with 5-Band Radio (FM/MW/SW1/SW2/SW3)

RS-4360FT MECHANISM SERIES

* This service manual includes only the changes of the RS-4360DFT service manual (ORDER NO. RD7812-1644S).
* This manual should be filed with the service manual for model RS-4360DFT (ORDER NO. RD7812-1644S).
* When servicing model RS-4360DFT supplement-1, this service manual and the RS-4360DFT service manual should be used together.
* For improved performance, Printed Circuit Board has been changed.
* Production incorporating this change is from December 1978, and serial number indication bears the suffix B instead of A.

SPECIFICATIONS

POWER REQUIREMENT:	AC: 100~110/115~127/200~220/230~250V, 50/60 Hz DC: 15V (ten UM-1, R-20 size dry batteries)
POWER CONSUMPTIONS:	35 W
POWER OUTPUT:	16 W (8 W×2)...DC MAX
FREQUENCY RESPONSE:	30–14,000 Hz
RECORDING STSTEM:	AC bias (50 kHz), AC erase
TAPE SPEED:	4.8 cm/s ($1\frac{7}{8}$ ips)
WOW AND FLUTTER:	0.15% (WRMS)
PROGRAM TIME:	1 hour with C-60 cassette tape
FAST-FORWARD AND REWIND TIME:	105 seconds with C-60 cassette tape
TRACK SYSTEM:	4-track stereo recording and playback
SOUND MONITOR:	Variable
INPUT:	MIC: sensitivity 0.3 mV/applicable micrphone impedance 200–600Ω LINE IN: 300 mV/50kΩ PHONO IN: 3 mV/55kΩ
OUTPUT:	LINE OUT: 350 mV/10kΩ EXT. SP. 4Ω HEADPHONE: 8Ω REMOTE: for start and stop at hand REC/PB: 5P DIN type
SPEAKER:	Woofer: 16 cm ($6\frac{1}{2}$'') PM dynamic Tweeter: 3 cm ($1\frac{1}{4}$'') PM dynamic
RADIO FREQUENCY RANGE:	FM: 87.5–108 MHz MW: 525–1605 kHz SW1: 1.6–4.5 kHz SW2: 4.5–12 MHz SW3: 12–28 MHz
SENSITIVITY:	FM: 3μV for 50mW output MW: 25μV/m for 50mW output SW1: 13μV/m for 50mW output SW2: 4μV for 50mW output SW3: 6μV for 50mW output
DIMENSIONS:	56.4 cm(W)×32.6 cm(H)×18.5 cm(D) $22\frac{1}{4}$''(W)×$12\frac{7}{8}$''(H)×$7\frac{5}{16}$''(D)
WEIGHT:	11.5 kg (25 lb 5.7 oz)

Specifications are subject to change without notice.

National Panasonic

Matsushita Electric Trading Co., Ltd.
P.O. Box 288, Central Osaka, Japan

CHANGES

■ REPLACEMENT PARTS LIST

Ref. No.	Change of Part No.		Part Name & Description	Per Set	Remarks
	RS-4360DFT ➡	RS-4360DFT Supplement-1			
R_{149}	ERD25TJ332	ERD25TJ122	1,2 kΩ ¼ Watt, Carbon	1	Ⓢ
R_{152}	ERD25TJ102	ERD25TJ331	330Ω, ¼ Watt, Carbon	1	Ⓢ
TR_{211}	2SD529	2SC1847	Transistor (Si), Regulator	1	

BLOCK DIAGRAM OF ELECTRICAL CIRCUITS

RECORDING CIRCUIT
(·····line indicates recording signal coming from condenser microphone.)

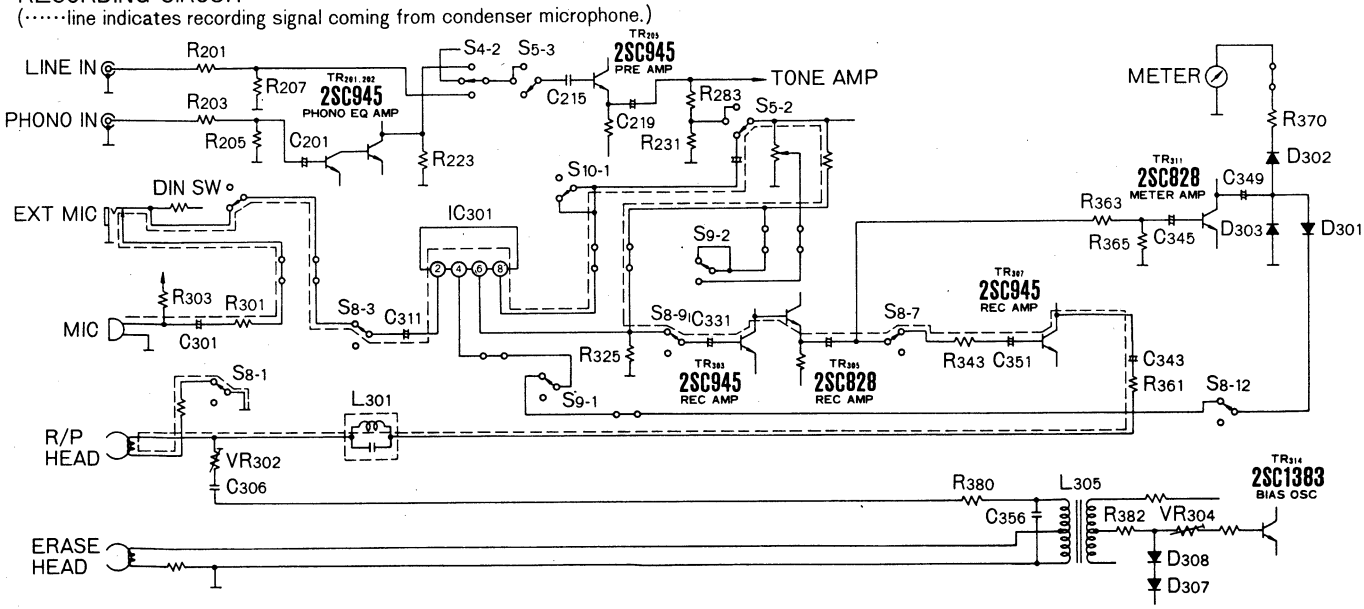

PLAYBACK CIRCUIT
(L. Channel)

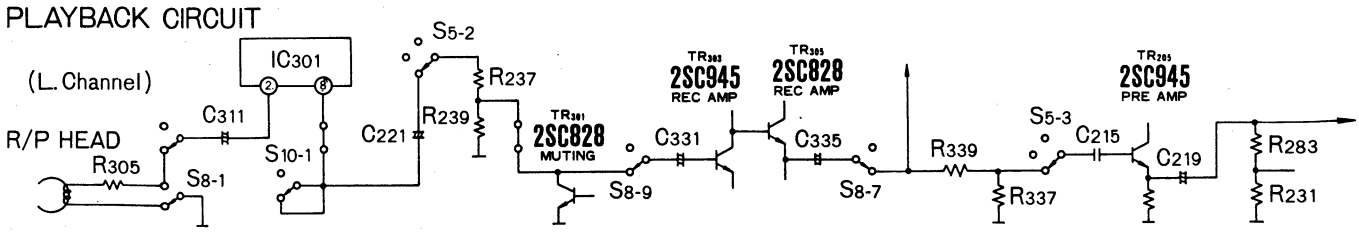

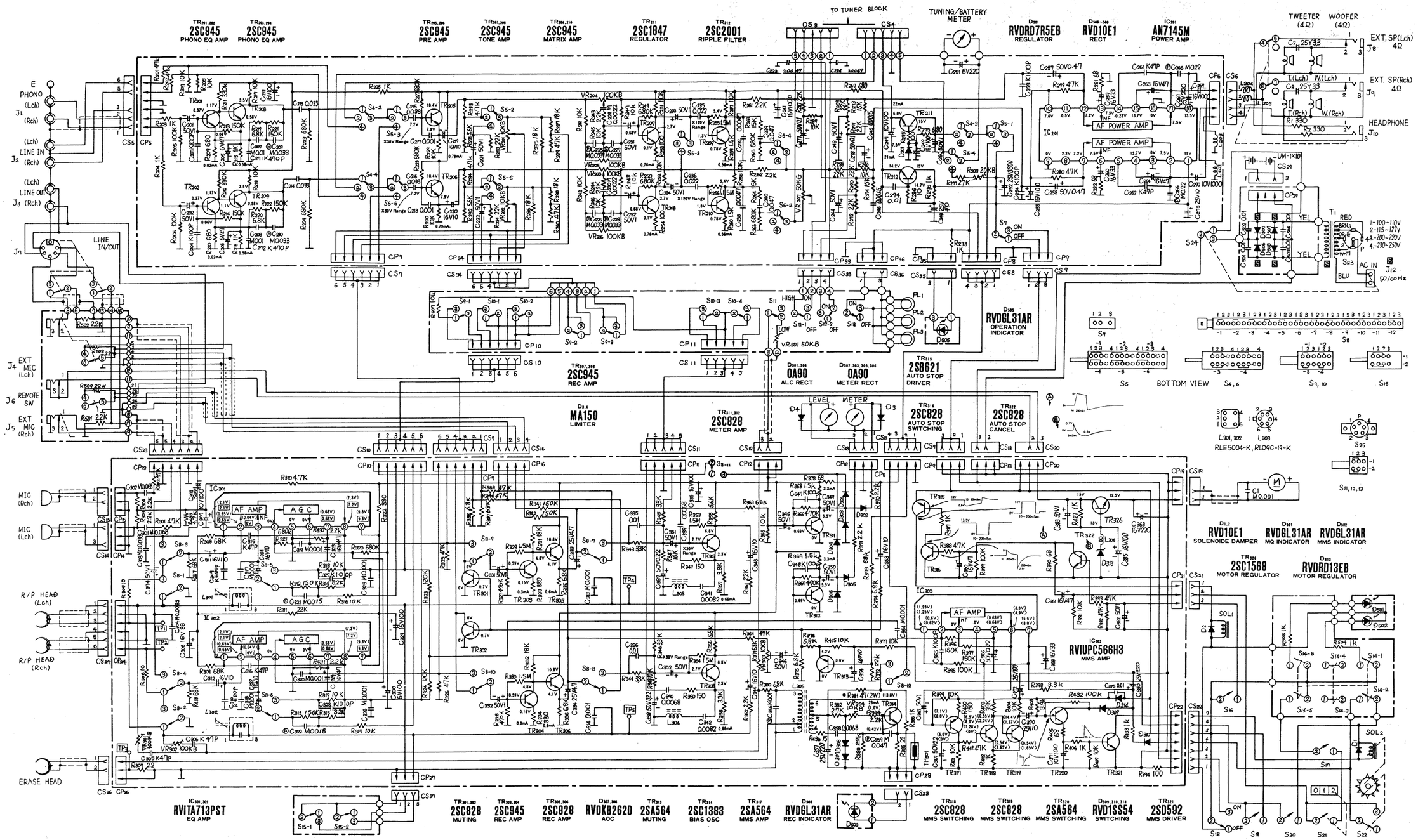

Notes:

1. S_{4-1}~S_{4-3}: Function switch in "PHONO" position.
2. S_{5-1}~S_{5-6}: Power switch in "SLEEP" position.
3. S_{6-1}~S_{6-3}: Mode switch in "STEREO WIDE" position.
4. S_7: Power switch in "OFF" position.
5. S_{8-1}~S_{8-12}: Recording/Play switch in "PLAY" position.
6. S_{9-1}~S_{9-3}: Rec switch in "MANUAL" position.
7. S_{10-1}~S_{10-4}: EQ switch in "NORMAL" position.
8. S_{11}: Bias switch in "NORMAL" position.
9. S_{12}: Loudness switch in "OFF" position.
10. S_{13}: Lamp switch in "OFF" position.
11. S_{14-1}~S_{14-6}: MPS/Memory switch in "OFF" position.
12. S_{15-1}, S_{15-2}: Edit switch in "OFF" position.
13. S_{16}: Solenoide time limit switch.
14. S_{17}: Rewind switch.
15. S_{18}: Tape power switch.
16. S_{19}: FF/Rewind switch.
17. S_{20}: Play switch.
18. S_{21}: Counter switch.
19. S_{22}: MPS switch.
20. S_{23}: AC voltage select switch.
21. S_{24}: AC/DC select switch in "DC" position.
22. DC voltage measurements are taken with circuit tester 100kΩ/V from earth.
    ▭.....Play back ( ).....Recording
    TR301, 302, 313, 317, 318, 319, IC303...MPS—ON, Play and FF or REWIND button push.
    〈 〉.....No signal 〔 〕.....with signal.
23. **S** indicates that only parts specified by the manufacturer be used for safety.

WIRING CONNECTION DIAGRAM MODEL RS-4360DFT TUNER BLOCK

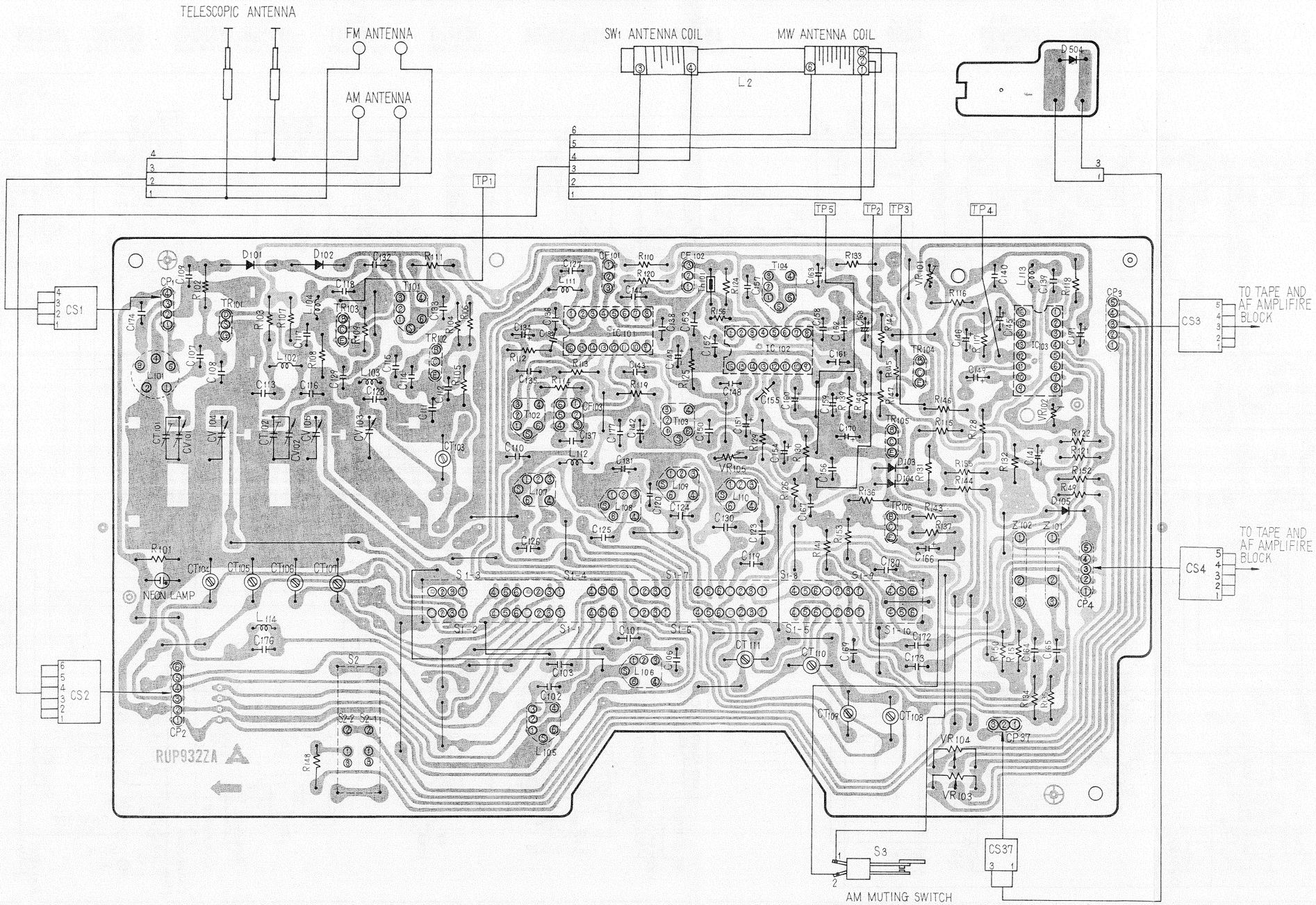

TR101

	FM
D	5.6V
G	0V
S	0V
Ip	1.5mA

TR102

	FM
C	2.3V
B	1.4V
E	0.8V
Ie	0.8mA

TR103

	FM
C	5.9V
B	0.68V
E	0.015V
Ie	1.5mA

TR104

	FM	MUTING-ON with signal
C	3.4V	3.1V
B	0.1V	0.8V
E	0.5V	0.4V

TR105

	FM	MUTING-ON with signal
C	0.1V	0V
B	0.15V	0.6V
E	0V	0V

TR106

	When band switch turn
C	0V
B	0.68V
E	0V

IC101

	FM	AM		FM	AM
1	0V	0.72V	9	0V	0.55V
2	0V	0.72V	10	0V	4.3V
3	0V	0V	11	0V	2.5V
4	3.2V	0V	12	0V	1V
5	3.3V	0V	13	0V	4.1V
6	4.5V	0V	14	0V	4.1V
7	3.3V	0V	15	0V	4.1V
8	0V	0V	16	0V	3.4V

IC102

	FM	AM		FM	AM
1	1.2V	0V	9	0V	0.6V
2	1.2V	0V	10	0V	1.4V
3	1.2V	0V	11	0V	0.35V
4	4.7V	0V	12	0V	0.7V
5	1.4V	0V	13	0V	4.3V
6	3.9V	0V	14	0V	1.35V
7	3.6V	0V	15	0V	1.1V
8	0V	0V	16	0V	0V

IC103

	FM Auto		FM Auto
1	5.8V	9	5.8V
2	2.3V	10	2V
3	4V	11	2V
4	4.2V	12	1.95V
5	4.2V	13	2.1V
6	11.8V	14	2V
7	0V	15	2V
8	0.34V	16	2.5V

SCHEMATIC DIAGRAM MODEL RS-4360DFT TUNER BLOCK

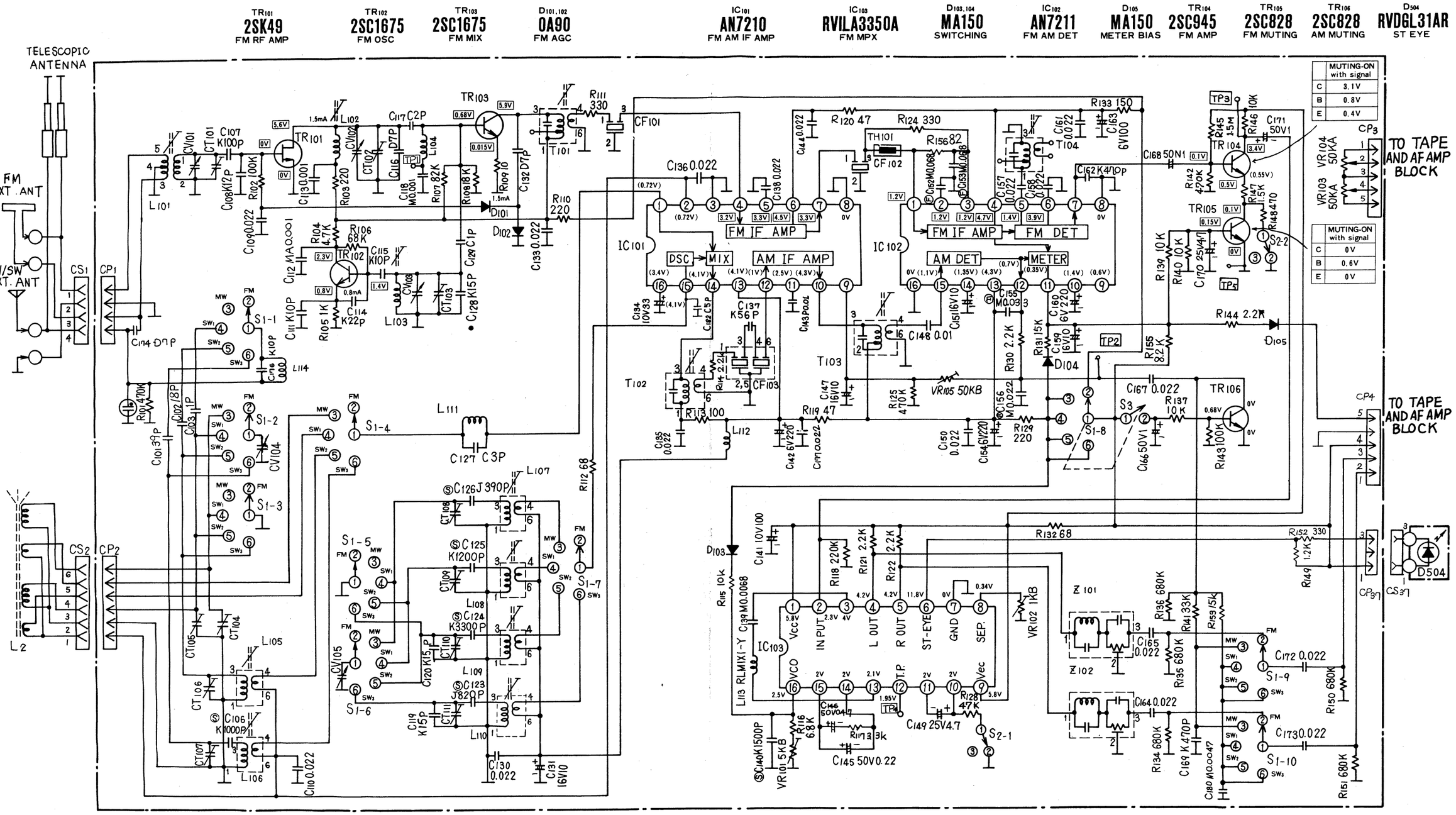

Notes:
1. S_{1-1}~S_{1-10}: Band switch in "FM" position.
2. S_{2-1}, S_{2-2}: FM mode/muting switch in "OFF" position.
3. S_3: AM muting switch in "OFF" position.
4. DC voltage measurements are taken with circuit tester 100kΩ/V from earth.
   ▭.....FM position ( ).....AM position
   IC_{103}.....FM AUTO position
   TR_{106}.....When band switch turning.

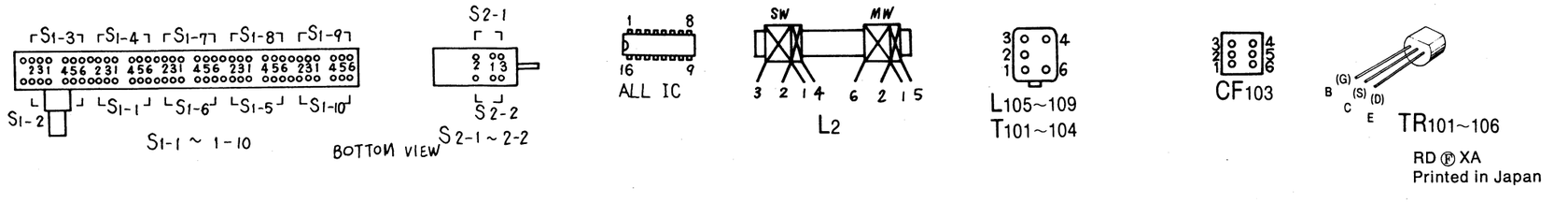

WIRING CONNECTION DIAGRAM MODEL

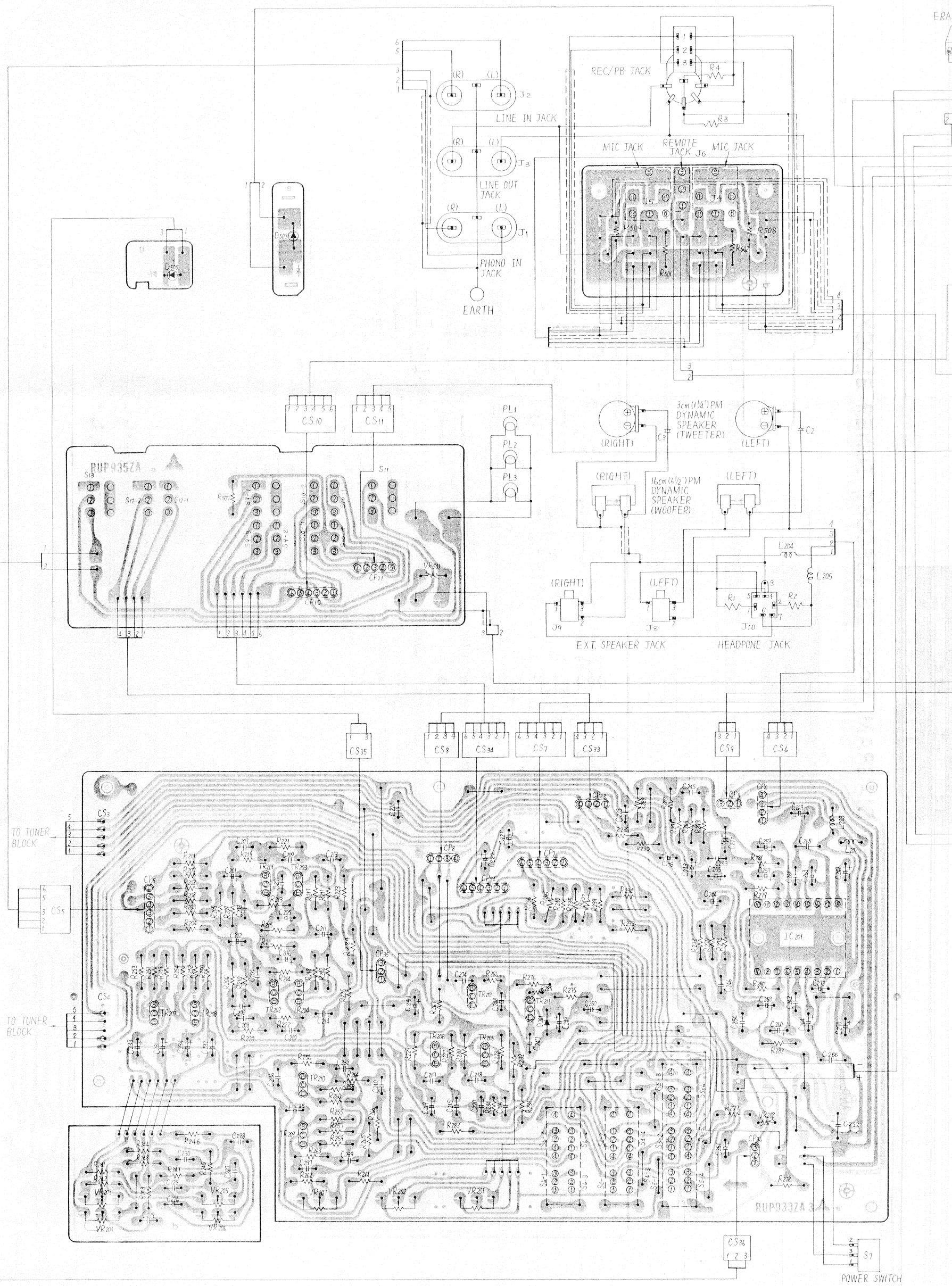

TR201, 202	
C	1.1V
B	0.32V
E	0.03V
Ic	0.05mA

TR203, 204	
C	3V
B	1.15V
E	0.68V
Ic	0.58mA

TR205, 206	
C	10V
B	8.12V - 30V Range
E	2.8V
Ic	0.79mA

TR207, 208	
C	2.7V
B	0.65V
E	0.08V
Ic	0.8mA

TR209, 210	
C	5.1V
B	1.3V - 120V Range
E	0.77V
Ic	0.5mA

TR211	
C	12V
B	7.3V
E	6.7V
Ic	22mA

TR212	
C	12V
B	11.9V
E	11.3V
Ic	21mA

TR301, 302	
	Play-FF or Rewind push
C	0V
B	0.65V
E	0V

TR303, 304	
C	4.8V
B	0.6V
E	0.1V
Ic	0.3mA

TR305, 306	
C	10V
B	4.8V
E	4.1V
Ic	0.6mA

TR307, 308	
C	6.7V
B	2.7V - 30V Range
E	2.3V
Ic	0.68mA

TR309, 310	
C	10V
B	6.7V
E	6.1V
Ic	0.9mA

AM MODEL RS-4360FT TAPE AND AF AMP BLOCK

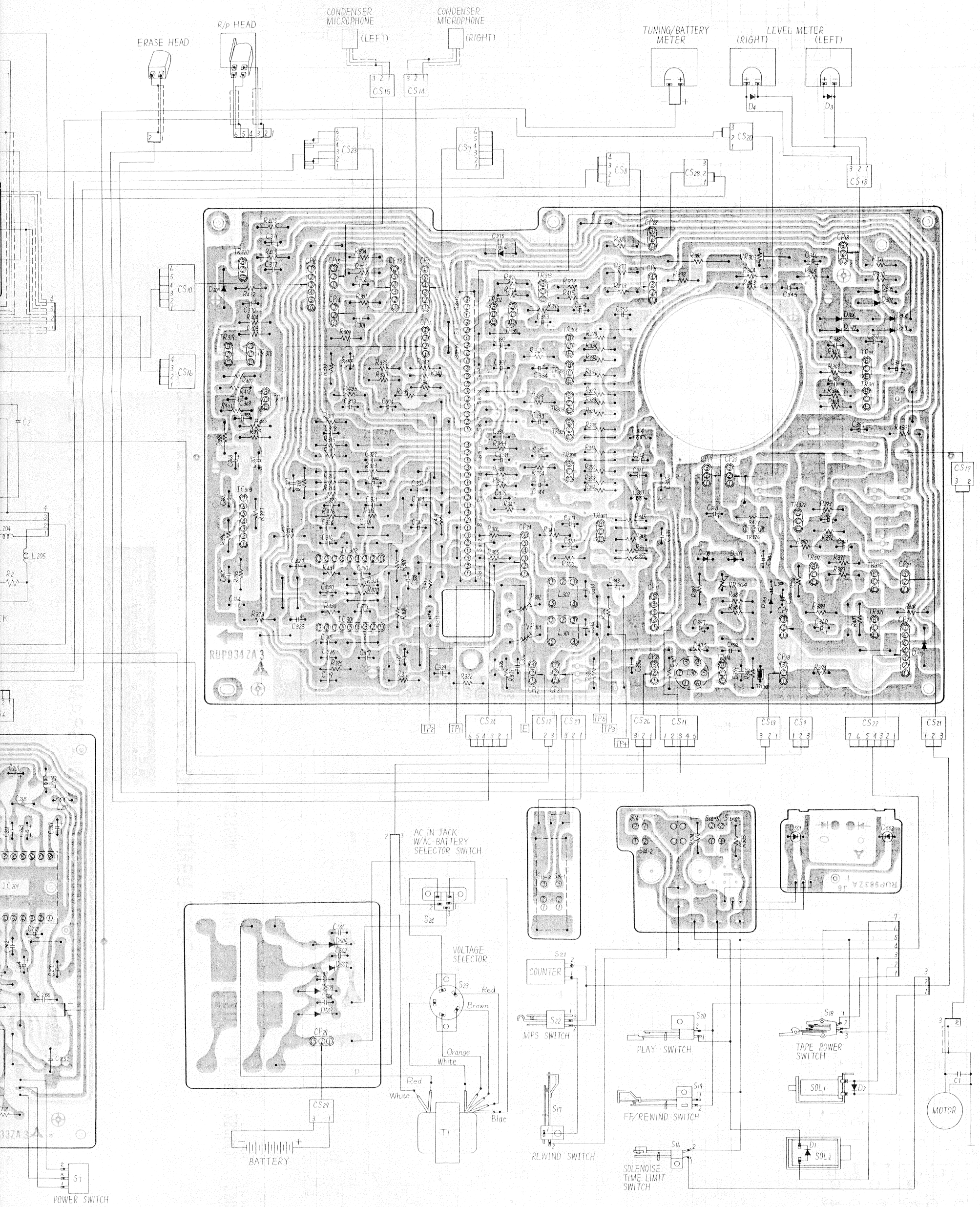

TR307, 308	
C	6.7V
B	2.7V > 30V Range
E	2.3V
Ie	0.68mA

TR309, 310	
C	10V
B	6.7V
E	6.1V
Ie	0.9mA

TR311, 312	
C	5V
B	0.68V
E	0V
Ie	3.3mA

TR313	
C	0V
B	2.75V
E	3.4V

TR314	
	REC
C	10.8V
B	1.04V
E	0.44V
Ie	20mA

TR317	No signal	Whith signal
C	0V	4.8V
B	6.4V	5.7V
E	6.4V	5V
Ie	0.48mA	0.48mA

TR318	No signal	Whith signal
C	2.1V	0.45V
B	0V	1.1V
E	1.4V	0.44V
Ie	0.44mA	0.44mA

TR319	No signal	Whith signal
C	1.4V	11.8V
B	2.1V	0.45V
E	1.4V	0.44V
Ie	1.4mA	1.4mA

IC201			
1	12V	10	5.9V
2	6V	11	0.5V
3	0V	12	5.7V
4	11V	13	5.9V
5	0.16V	14	0.16V
6	5.9V	15	11V
7	5.7V	16	0V
8	1.7V	17	6V
9	0V	18	10.6V

IC301, 302	Playback	Recording
1	2.1V	2.1V
2	0.65V	0.69V
3	0V	0.1V
4	0V	0V
5	0V	0V
6	0V	0V
7	0.68V	0.75V
8	6.2V	4.7V
9	8.8V	8.3V

IC303	No signal	Whith signal
1	1.2V	1.1V
2	0.58V	0.5V
3	0V	0V
4	0V	0V
5	0.6V	0.55V
6	3.5V	2.6V
7	6.4V	5V

SCHEMATIC DIAGRAM MODEL RS-4360DFT TUNER BLOCK

TR101	TR102	TR103	D101,102	IC101	IC103	D103,104	IC102	D105	TR104	TR105	TR106	D504
2SK49	2SC1675	2SC1675	0A90	AN7210	RVILA3350A	MA150	AN7211	MA150	2SC945	2SC828	2SC828	RVDGL31AR
FM RF AMP	FM OSC	FM MIX	FM AGC	FM AM IF AMP	FM MPX	SWITCHING	FM AM DET	METER BIAS	FM AMP	FM MUTING	AM MUTING	ST EYE

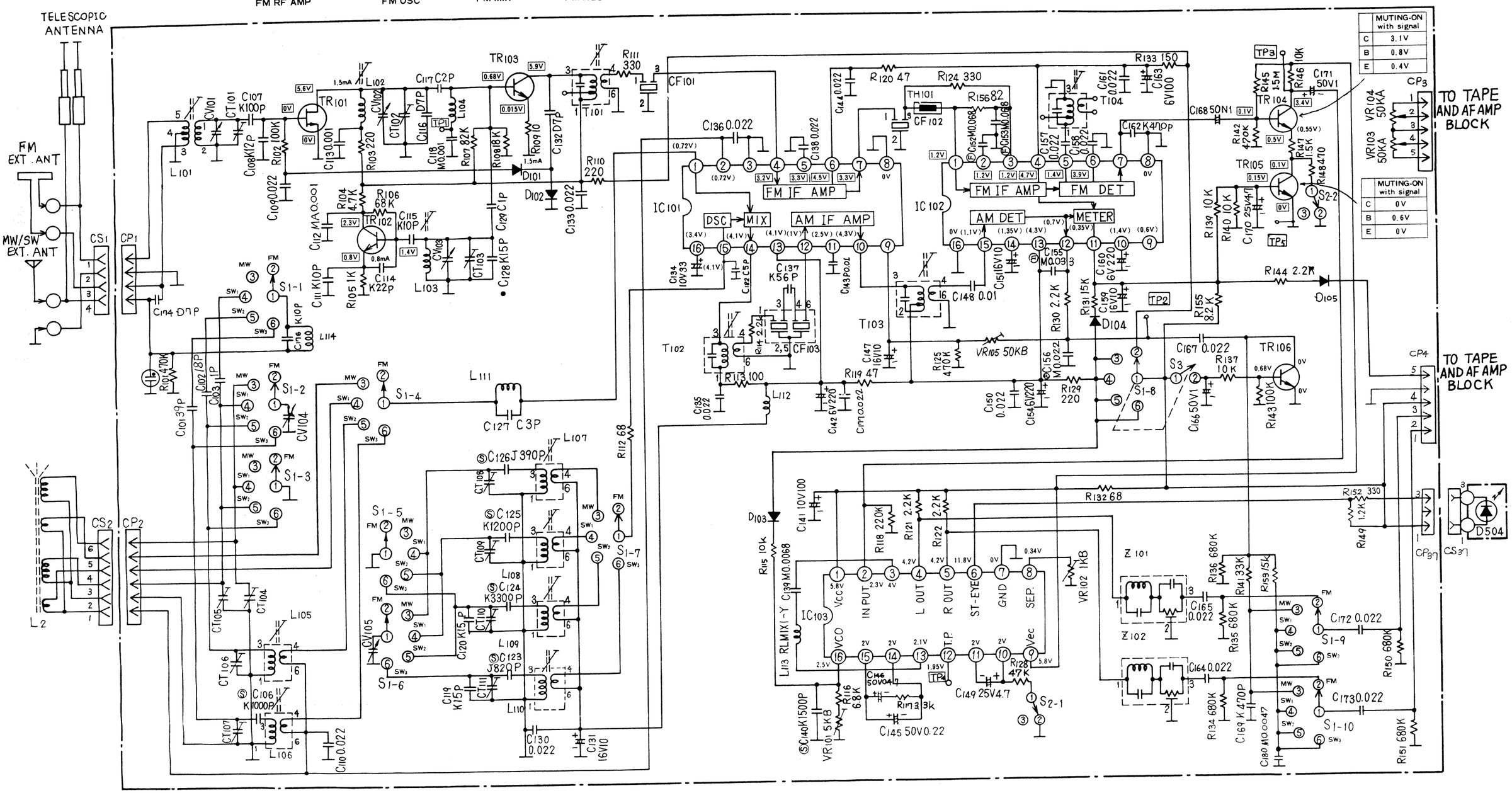

Notes:

1. S_{1-1}~S_{1-10}: Band switch in "FM" position.
2. S_{2-1}, S_{2-2}: FM mode/muting switch in "OFF" position.
3. S_3: AM muting switch in "OFF" position.
4. DC voltage measurements are taken with circuit tester 100kΩ/V from earth.
   ▭.....FM position ( ).....AM position
   IC_{103}.....FM AUTO position
   TR_{106}.....When band switch turning.

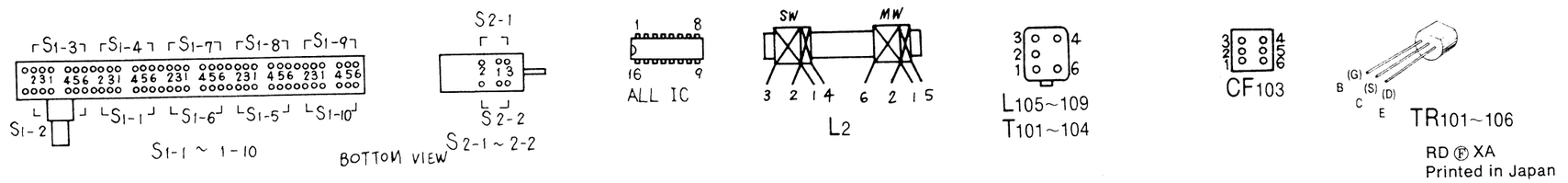

WIRING CONNECTION DIAGRAM MODEL RS-4360DFT TUNER BLOCK

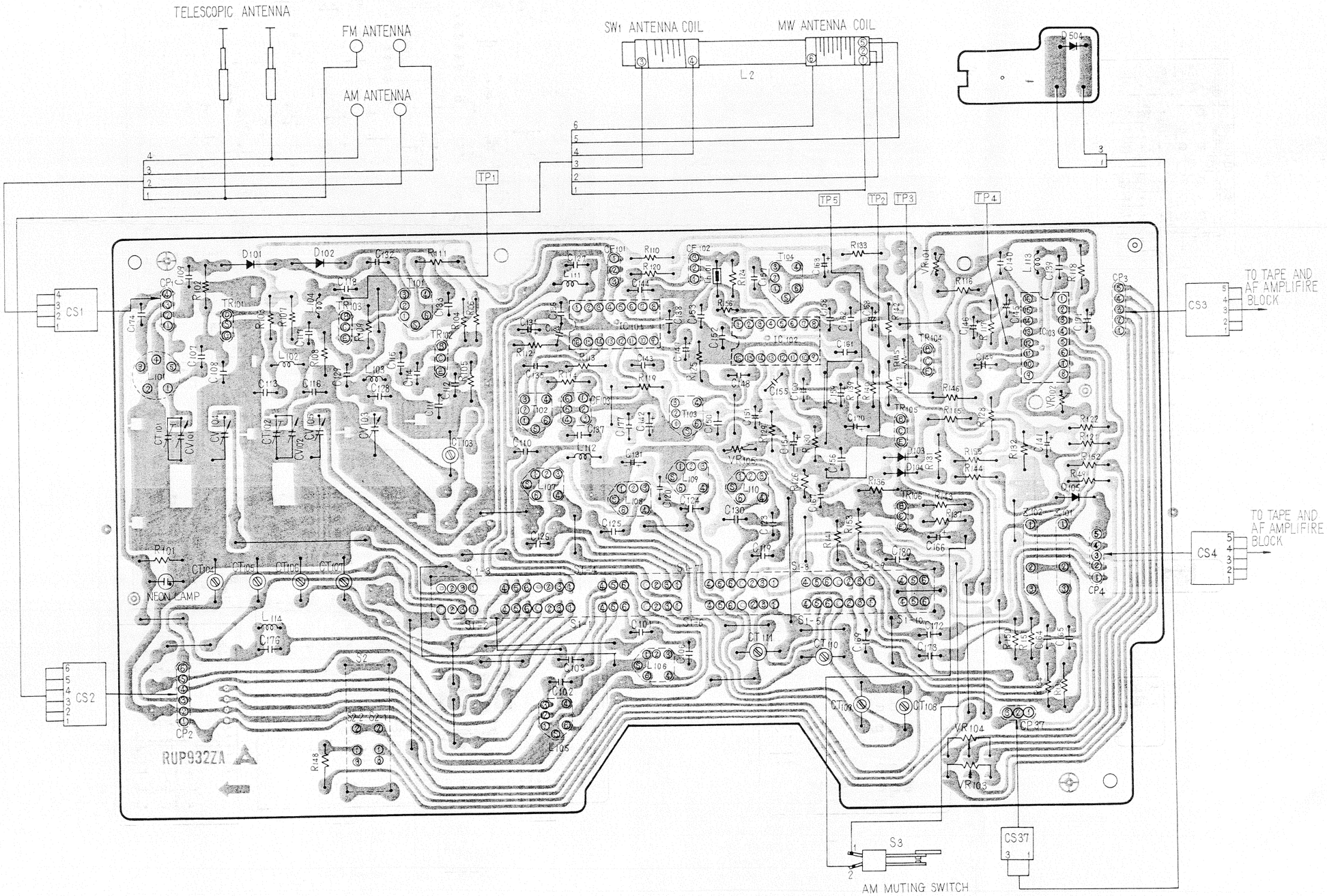

TR101

	FM
D	5.6V
G	0V
S	0V
Id	1.5mA

TR102

	FM
C	2.3V
B	1.4V
E	0.8V
Ie	0.8mA

TR103

	FM
C	5.9V
B	0.68V
E	0.015V
Ie	1.5mA

TR104

	FM	MUTING-ON with signal
C	3.4V	3.1V
B	0.1V	0.8V
E	0.5V	0.4V

TR105

	FM	MUTING-ON with signal
C	0.1V	0V
B	0.15V	0.8V
E	0V	0V

TR106

	When band switch turn
C	0V
B	0.68V
E	0V

IC101

	FM	AM		FM	AM
1	0V	0.72V	9	0V	0.55V
2	0V	0.72V	10	0V	4.3V
3	0V	0V	11	0V	2.5V
4	3.2V	0V	12	0V	1V
5	3.3V	0V	13	0V	4.1V
6	4.5V	0V	14	0V	4.1V
7	3.3V	0V	15	0V	4.1V
8	0V	0V	16	0V	3.4V

IC102

	FM	AM		FM	AM
1	1.2V	0V	9	0V	0.8V
2	1.2V	0V	10	0V	1.4V
3	1.2V	0V	11	0V	0.35V
4	4.7V	0V	12	0V	0.7V
5	1.4V	0V	13	0V	4.3V
6	3.9V	0V	14	0V	1.35V
7	3.6V	0V	15	0V	1.1V
8	0V	0V	16	0V	0V

IC103

	FM Auto		FM Auto
1	5.8V	9	5.8V
2	2.3V	10	2V
3	4V	11	2V
4	4.2V	12	1.95V
5	4.2V	13	2.1V
6	11.8V	14	2V
7	0V	15	2V
8	0.34V	16	2.5V

WIRING CONNECTION DIAGRAM MODEL RS-4360

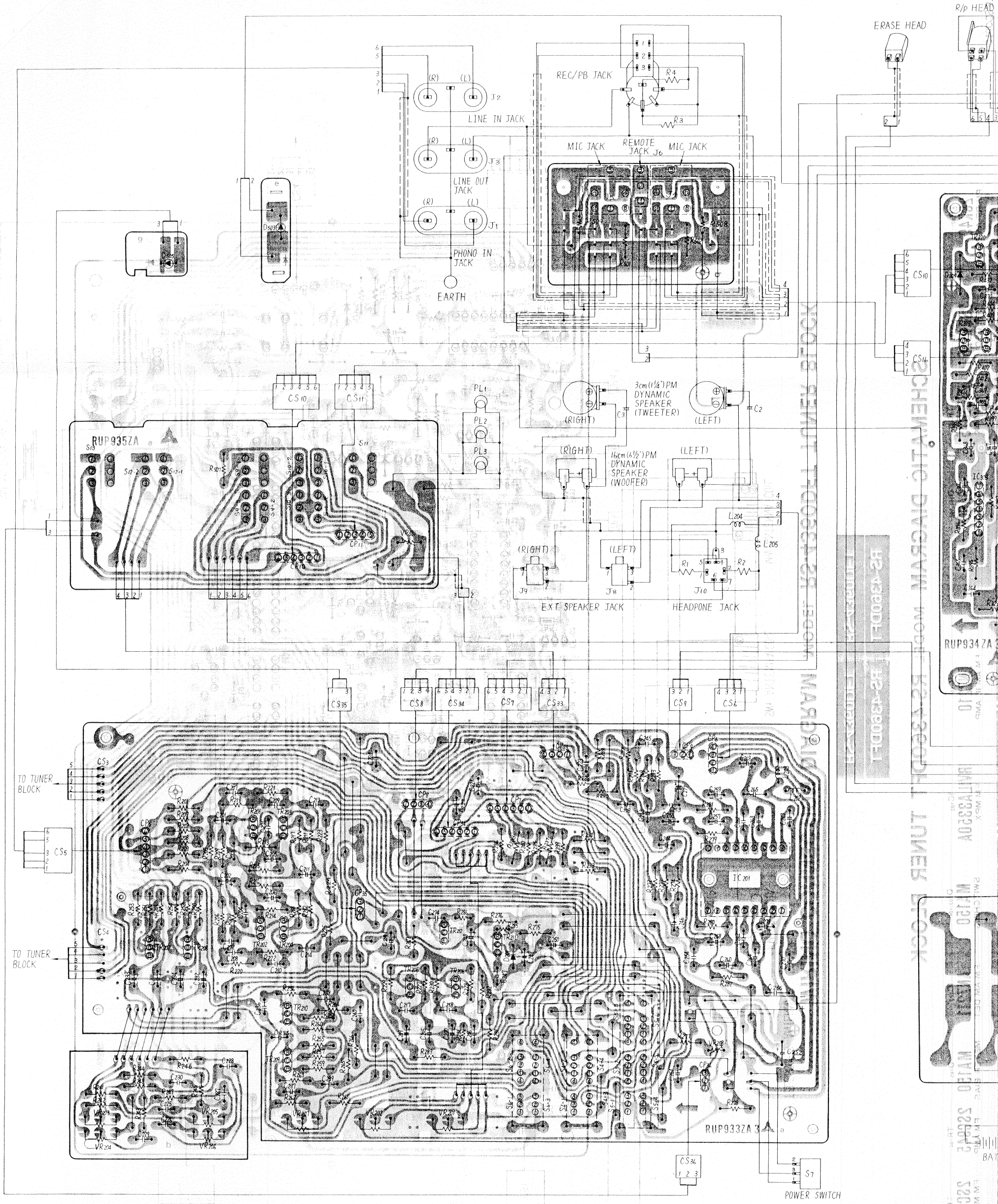

TR201, 202	
C	1.1V
B	0.37V
E	0.03V
Ie	0.05mA

TR203, 204	
C	3V
B	1.15V
E	0.58V
Ie	0.58mA

TR205, 206	
C	10.5V
B	8.12V × 30V Range
E	7.8V
E	0.79mA

TR207, 208	
C	2.7V
B	0.65V
E	0.08V
Ie	0.8mA

TR209, 210	
C	5.1V
B	1.3V × 120V Range
E	0.77V
Ie	0.5mA

TR211	
C	12V
B	7.3V
E	6.7V
Ie	22mA

TR212	
C	12V
B	11.9V
E	11.3V
Ie	21mA

TR301, 302	
	Play, FF, or Rewind push
C	0V
B	0.65V
E	0V

TR303, 304	
C	4.8V
B	0.6V
E	0.1V
Ie	0.3mA

TR305, 306	
C	10V
B	4.8V
E	4.1V
Ie	0.6mA

TR307, 308	
C	6.7V
B	2.7V × 30V Range
E	2.3V
Ie	0.68mA

TR309, 310	
C	10V
B	6.7V
E	6.1V
Ie	0.9mA

TR311, 312	
C	5V
B	0.68V
E	0V
Ic	3.3mA

MODEL RS-4360FT TAPE AND AF AMP BLOCK

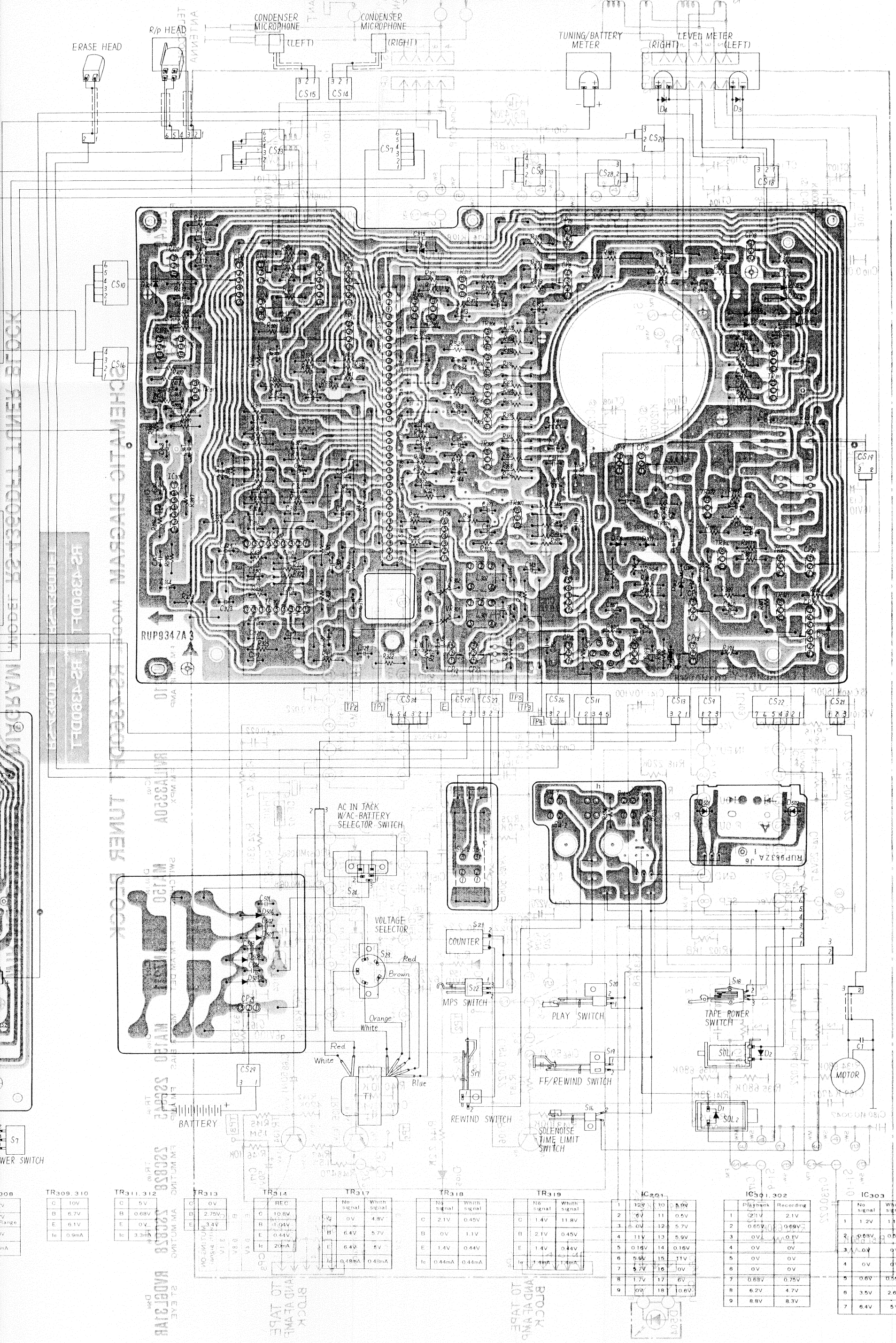

TR308	
C	10V
B	6.7V
E	6.1V
Ie	0.9mA

TR309, 310	
C	5V
B	6.7V
E	6.1V
Ie	0.9mA

TR311, 312	
C	5V
B	0.68V
E	0V
Ie	3.3mA

TR313	
C	0V
B	2.75V
E	3.4V

TR314	
	REC
C	10.8V
B	1.04V
E	0.44V
Ie	20mA

TR317	No signal	Whith signal
C	0V	4.8V
B	6.4V	5.7V
E	6.4V	5V
Ie	0.48mA	0.48mA

TR318	No signal	Whith signal
C	2.1V	0.45V
B	0V	1.1V
E	1.4V	0.44V
Ie	0.44mA	0.44mA

TR319	No signal	Whith signal
C	1.4V	11.8V
B	2.1V	0.45V
E	1.4V	0.44V
Ie	1.4mA	1.4mA

IC201			
1	12V	10	5.9V
2	6V	11	0.5V
3	0V	12	5.7V
4	11V	13	5.9V
5	0.16V	14	0.16V
6	5.9V	15	11V
7	5.7V	16	0V
8	1.7V	17	6V
9	0V	18	0.6V

IC301, 302	Playback	Recording
1	2.1V	2.1V
2	0.65V	0.69V
3	0V	0.1V
4	0V	0V
5	0V	0V
6	0V	0V
7	0.69V	0.75V
8	6.2V	4.7V
9	8.8V	8.3V

IC303	No signal	Whith signal
1	1.2V	1.1V
2	0.68V	0.5V
3	0V	0V
4	0V	0V
5	0.6V	0.55V
6	3.5V	2.6V
7	6.4V	5V

Service Manual

Radio Cassette

RS-4360DFT

Stereo Cassette Recorder with 5-Band Radio (FM/MW/SW1/SW2/SW3)

RS-4360FT MECHANSIM SERIES

* This service manual includes only the changes of the RS-4360FT service manual (ORDER NO. RD7804-1558).
* This manual should be filed with the service manual for model RS-4360FT (ORDER NO. RD7804-1558).
* When servicing model RS-4360DFT (RD7812-1644S), this service manual and the RS-4360FT service manual should be used together.

SPECIFICATIONS

POWER REQUIREMENT:	AC: 100~110/115~127/200~220/230~250V, 50/60 Hz DC: 15V (ten UM-1, R-20 size dry batteries)
POWER CONSUMPTIONS:	35 W
POWER OUTPUT:	16 W (8 W×2)...DC MAX
FREQUENCY RESPONSE:	30–14,000 Hz
RECORDING STSTEM:	AC bias (50 kHz), AC erase
TAPE SPEED:	4.8 cm/s ($1\frac{7}{8}$ ips)
WOW AND FLUTTER:	0.15% (WRMS)
PROGRAM TIME:	1 hour with C-60 cassette tape
FAST-FORWARD AND REWIND TIME:	105 seconds with C-60 cassette tape
TRACK SYSTEM:	4-track stereo recording and playback
SOUND MONITOR:	Variable
INPUT:	MIC: sensitivity 0.3 mV/applicable micrphone impedance 200–600Ω LINE IN: 300 mV/50kΩ PHONO IN: 3 mV/55kΩ
OUTPUT:	LINE OUT: 350 mV/10kΩ EXT. SP. 4Ω HEADPHONE: 8Ω REMOTE: for start and stop at hand REC/PB: 5P DIN type
SPEAKER:	Woofer: 16 cm ($6\frac{1}{2}$") PM dynamic Tweeter: 3 cm ($1\frac{1}{4}$") PM dynamic
RADIO FREQUENCY RANGE:	FM: 87.5–108 MHz MW: 525–1605 kHz SW1: 1.6–4.5 kHz SW2: 4.5–12 MHz SW3: 12–28 MHz
SENSITIVITY:	FM: 3μV for 50mW output MW: 25μV/m for 50mW output SW1: 13μV/m for 50mW output SW2: 4μV for 50mW output SW3: 6μV for 50mW output
DIMENSIONS:	56.4 cm(W)×32.6 cm(H)×18.5 cm(D) $22\frac{1}{4}$"(W)×$12\frac{7}{8}$"(H)×$7\frac{5}{16}$"(D)
WEIGHT:	11.5 kg (25 lb 5.7 oz)

Specifications are subject to change without notice.

National Panasonic

Matsushita Electric Trading Co., Ltd.
P.O. Box 288, Central Osaka, Japan

CHANGES

■ REPLACEMENT PARTS LIST

Ref. No.	Change of Part No.		Part Name & Description	Per	Remarks
	RS-4360FT ➡	RS-4360DFT		Set	
M_{41}	MMI6C2HCXA	MMC6A2HXA	DC Motor	1	○
$R_{3,4}$	ERD25TJ222	——	Removed		
R_{107}	ERD25TJ104	**ERD25TJ823**	Carbon Resistor, 82kΩ, ¼ Watt	1	
R_{156}	ERD25TJ680	**ERD25TJ820**	Carbon Resistor, 82Ω, ¼ Watt	1	
R_{267}	ERD25TJ221	**ERD25TJ681**	Carbon Resistor, 680Ω, ¼ Watt	1	
$R_{269,270}$ $R_{271,272}$	ERD25TJ682	**ERD25TJ222**	Carbon Resistor, 2.2kΩ, ¼ Watt	4	
$R_{273,274}$	ERD25TJ333	**ERD25TJ153**	Carbon Resistor, 15kΩ, ¼ Watt	2	
R_{275}	ERD25TJ102	**ERD25TJ681**	Carbon Resistor, 680Ω, ¼ Watt	1	
R_{277}	ERD25TJ223	**ERD25TJ273**	Carbon Resistor, 27kΩ, ¼ Watt	1	
$R_{281,282}$	ERD25TJ151	**ERD25TJ680**	Carbon Resistor, 68Ω, ¼ Watt	2	
$R_{287,288}$	——	**ERD25TJ223**	Carbon Resistor, 22kΩ, ¼ Watt	2	
$R_{289,290}$	——	**ERD25TJ103**	Carbon Resistor, 10kΩ, ¼ Watt	2	
$R_{323,324}$	ERD25TJ104	**ERD25TJ124**	Carbon Resistor, 120kΩ, ¼ Watt	2	
$R_{343,344}$ $R_{345,346}$	ERD25TJ103	**ERD25TJ332**	Carbon Resistor, 3.3kΩ, ¼ Watt	4	
$R_{351,352}$	ERD25TJ680	——	Removed		
$R_{355,356}$	ERD25TJ472	**ERD25TJ562**	Carbon Resistor, 5.6kΩ, ¼ Watt	2	
$R_{359,360}$	ERD25TJ682	——	Removed		
$R_{361,362}$	ERD25TJ472	**ERD25TJ222**	Carbon Resistor, 2.2kΩ, ¼ Watt	2	
R_{378}	ERD25TJ680	**ERD25TJ221**	Carbon Resistor, 220Ω, ¼ Watt	1	
R_{380}	ERD25TJ222	**ERD25TJ682**	Carbon Resistor, 6.8kΩ, ¼ Watt	1	
R_{394}	ERXIANJ1R0	**ERD25TJ101**	Carbon Resistor, 100Ω, ¼ Watt	1	
$R_{417,418}$	——	**ERD25TJ683**	Carbon Resistor, 68kΩ, ¼ Watt	2	
R_{427}	——	**ERD25TJ102**	Carbon Resistor, 1kΩ, ¼ Watt	1	
R_{436}	——	**ERD25TJ150**	Carbon Resistor, 15Ω, ¼ Watt	1	
$C_{301,302}$	ECEA50ZRI	ECFVD683MD	Semi-Conductor capacitor 0.068μF	2	
VR_{105}	EVLT4AA00B15	**EVLT4AA00B54**	Preset, Meter Adjust, 50kΩ	1	
$VR_{208,304}$	EVNK4AA00B14	EVNK4AA00B24	Preset, Meter & Erase Bias Adjust, 20kΩ	2	
C_1	ECEA1CS221	ECKD1H102MD	Ceramic Capacitor 0.001μF	1	
C_4	ECKD1H223ND	——	Removed		
$C_{243,244}$	ECEA50ZR33	**ECEA2AS010**	Electrolytic Capacitor 1μF	2	
$C_{245,246}$	ECKD1H471KB	ECKD1H152MD	Ceramic Capacitor 0.0015μF	2	
C_{252}	ECEA1CS222	**ECEA1CS332**	Electrolytic Capacitor 3300μF	1	
$C_{275,276}$	ECEA50ZR22	——	Removed		
$C_{277,278}$	——	**ECEA50ZR1**	Electrolytic Capacitor 0.1μF	2	
C_{358}	ECQG05153MZ	ECQG05682MZ	Polystylene Capacitor 0.0068μF	1	
C_{372}	ECEA1HS100	**ECEA1ES101**	Electrolytic Capacitor 100μF	1	
C_{375}	——	**ECKD1H103ZF**	Ceramic Capacitor 0.01μF	1	
$C_{381,382}$	——	**ECEA1HS100**	Electrolytic Capacitor 10μF	2	
C_{383}	——	**ECEA1HS010**	Electrolytic Capacitor 1μF	1	
C_{385}	——	**ECEA1ES101**	Electrolytic Capacitor 100μF	1	
TR_{211}	2SC945	2SD592	Transistor	1	
$TR_{309,310}$	2SC828	——	Removed		
TR_{321}	2SC1383	2SD592	Transistor	1	
TR_{315}	2SA683	2SB621	Transistor	1	
TR_{326}	——	2SC1568	Transistor	1	
D_{313}	——	**RVDRD12FB**	Diode	1	

Ref. No.	Change of Part No.		Part Name & Description	Per	Remarks
	RS-4360FT ➡	RS-4360DFT		Set	
D_{314}	——	**SM112**	Diode	1	
T_1	RLT5W22	RLT5W23	Power Transformer	1	○
$L_{104,114}$	——	RLQY30S1	Trap Coil, FM	1	
$R_{111,202,203}$ 204,205	——	RLQY11G4	Chalk Coil	5	
L_{112}	——	RLQY1003	Chalk Coil	1	
L_{113}	——	RLM1X1	Trap Coil	1	
L_{306}	——	RLQY30S1	Trap Coil	1	
L_{311}	RLM1X1	——	Removed		
S_{23}	QSR1403	RSR4A01X	Voltage Selector Switch	1	
$J_{1\sim6}$	RZES4360FTX	($J_{1\sim3}$) RYE1S4360DFT	Jack Assembly, Phono In, Line In, Line Out	1	
		($J_{4,5}$) QJA0153	Jack, MIC	2	
		(J_6) QJA0156	Jack, Remote	1	
E_2	RJH30Z	RJH7E1Z	Head, Erase	1	
E_5	EAS16P24EH	EAS16P33GX	Speaker, Woofer	2	○
E_7	XAMR48T200	XAMR58T200	Pilot Lamp	2	
E_8	XAMR48T250	XAMR58T250	Pilot Lamp	1	
E_{23}	RKE257Z	RKE257Y	Jack Board, AC IN	1	
E_{26}	RSG11Z	RSG11Y	Plunger Assembly	1	
E_{57}	XANR5T25	XANR2T20	Neon Lamp	1	
E_{58}	——	RMW151Y	Angle, Micro Switch	1	○
E_{59}	——	RUV407	Cover, Power, Selector, Mode	3	○
E_{60}	——	RMA165Z	Holder, Bar Antenna	1	○
E_{61}	——	RMD3056Y	Lever, Cassette Slot (L)	1	○
E_{62}	——	RMD3056Z	Lever, Cassette Slot (R)	1	○
E_{63}	——	RDF227Z	Shaft, Cassette Slot	2	○
E_{64}	——	RMW152Z	Bracket, Eject Switch	1	○
E_{65}	——	RNW150-2	Washer	6	
E_{66}	——	RHG211	Rubber, Pilot Lamp	1	○
E_{67}	——	RHM90Z	Spacer, Motor	1	○
E_{68}	——	RMY62Y	Heat Shink	1	○
E_{69}	——	RUV114A	Cover, Tape Counter	1	○
G_1	RYMS3460FTX	RYMS4360DFTX	Cabinet Assembly	1	
G_2	RYFS4360FTX	RYFS4360DFTX	Cabinet Cover Assembly	1	
G_{2-4}	——	RJC915Z	Terminal, Battery ⊕⊖ Side	2	
G_5	XSB3+6BNS	XSB3+8BNS	Screw, Handle M'tg	4	
G_6	XYN3+C6S	XYN3+C8S	Screw, Arm M'tg	2	
G_{12}	RYES4360FTX	RYE2S4360DFT	Microphone Rest Assembly	2	○
G_{13}	RYGS4360FTX	RYGS4360DFTX	Microphone Grille Assembly	2	○
G_{17}	RMD2030Z	RMD2030Y	Bracket, Microphone	2	○
G_{19}	RHG468Z	RHG483Z	Rubber Holder, Microphone	2	○
G_{36}	RJM139Z	RJM141Z	Condenser Microphone	2	○
G_{38}	——	RMA89A	Bracket, Telescopic Antenna	2	○
G_{39}	——	RMD3062Y	Bracket, Microphone	2	○
G_{40}	——	RHG481Z	Rubber Microphone	2	○
G_{41}	——	RHM100Z	Spacer, Microphone	2	○
G_{42}	——	RKK150Z	Accessory Cover	1	○
A_1	RJN14Z	RJN19Z	Cassette Tape	1	
A_6	RQX6237Z	RQX6352Z	Instruction Book	1	○
P_2	RPN9261Z	RPN9268Z	Pad Complete	1	○
P_3	RPK595Z	RPK699Z	Gift Box	1	○

DISASSEMBLY INSTRUCTIONS

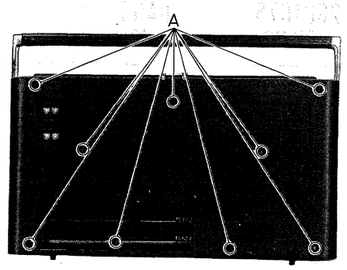

Fig. 2

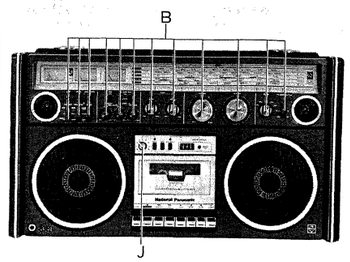

Fig. 3

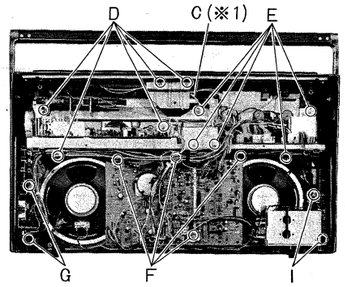

Fig. 4

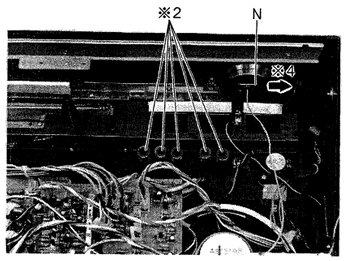

Fig. 5

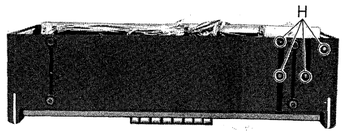

Fig. 6

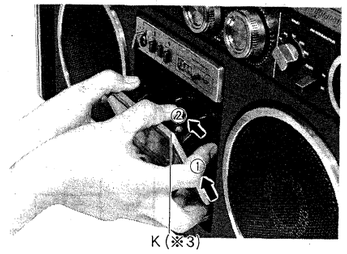

Fig. 7

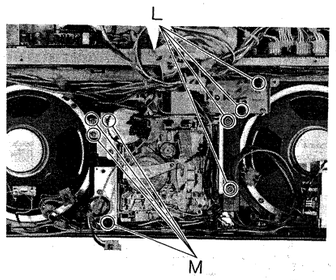

Fig. 8

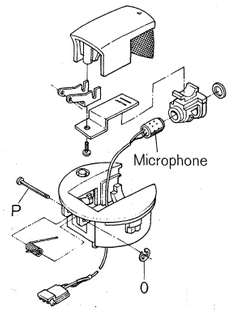

Fig. 9

※1. When mount the chassis, set tuning capacitor to maximum capacity and dial pointer to "0" point of dail scale.
※2. When mount the chassis, insert the knobs at the position, as shown in fig. 5.
※3. Remove the cassette lid in the direction of arrows ① and ②.
※4. Pull out the holder in the direction of arrow.

Procedure	To remove—.	Remove—.	Pcs.	Shown in fig—.
1	Cabinet cover	(A)	(9)	(2)
2	Chassis	(B), (C), (D), (E)	(12), (1), (5), (5)	(3), (4), (4), (4)
3	PC board	(F)	(4)	(4)
4	Jack board assembly	(G)	(2)	(4)
5	Power supply section	(H)	(4)	(6)
6	Jack board	(I)	(2)	(4)
7	Tape deck	(J), (K), (L), (M)	(1), (1), (4), (4)	(3), (7), (8), (8)
8	Microphone	(N), (O), (P)	(1), (1), (1)	(5), (9), (9)

SCHEMATIC DIAGRAM MODEL RS-4360DFT TUNER BLOCK

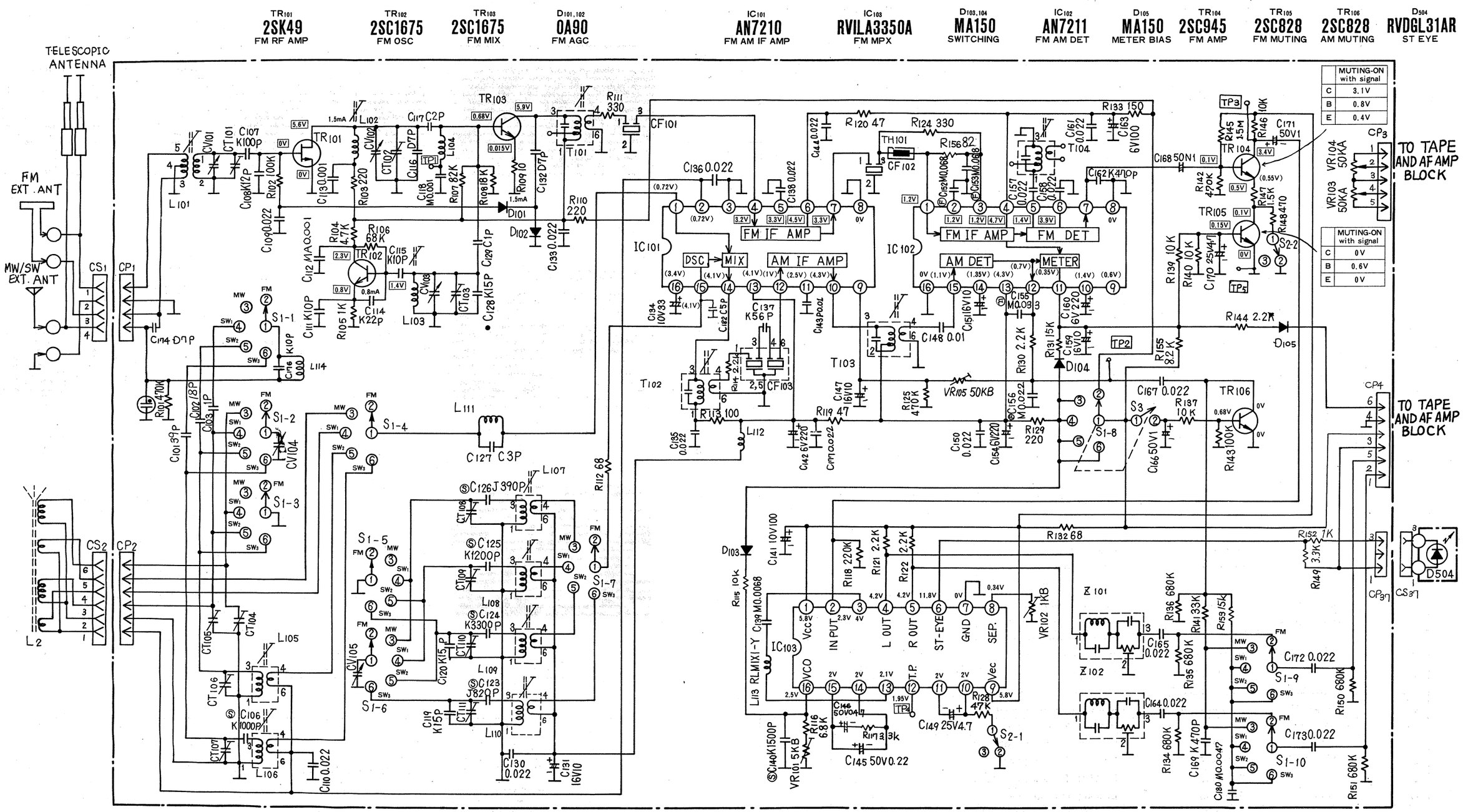

Notes:

1. S_{1-1}~S_{1-10}: Band switch in "FM" position.
2. S_{2-1}, S_{2-2}: FM mode/muting switch in "OFF" position.
3. S_3: AM muting switch in "OFF" position.
4. DC voltage measurements are taken with circuit tester 100kΩ/V from earth.
   ▭.....FM position ( ).....AM position
   IC_{103}.....FM AUTO position
   TR_{106}.....When band switch turning.

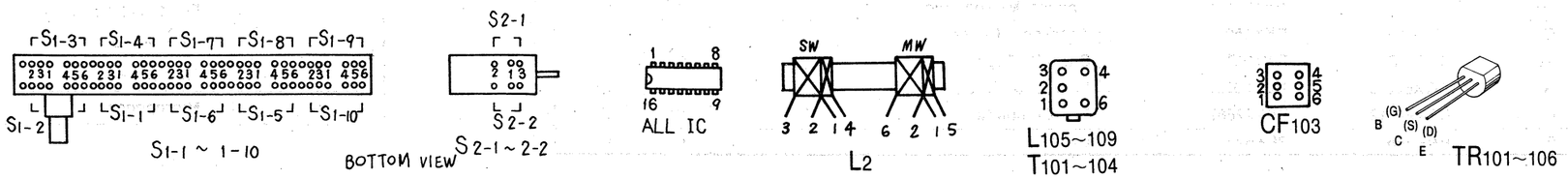

WIRING CONNECTION DIAGRAM MODEL RS-4360DFT TUNER BLOCK

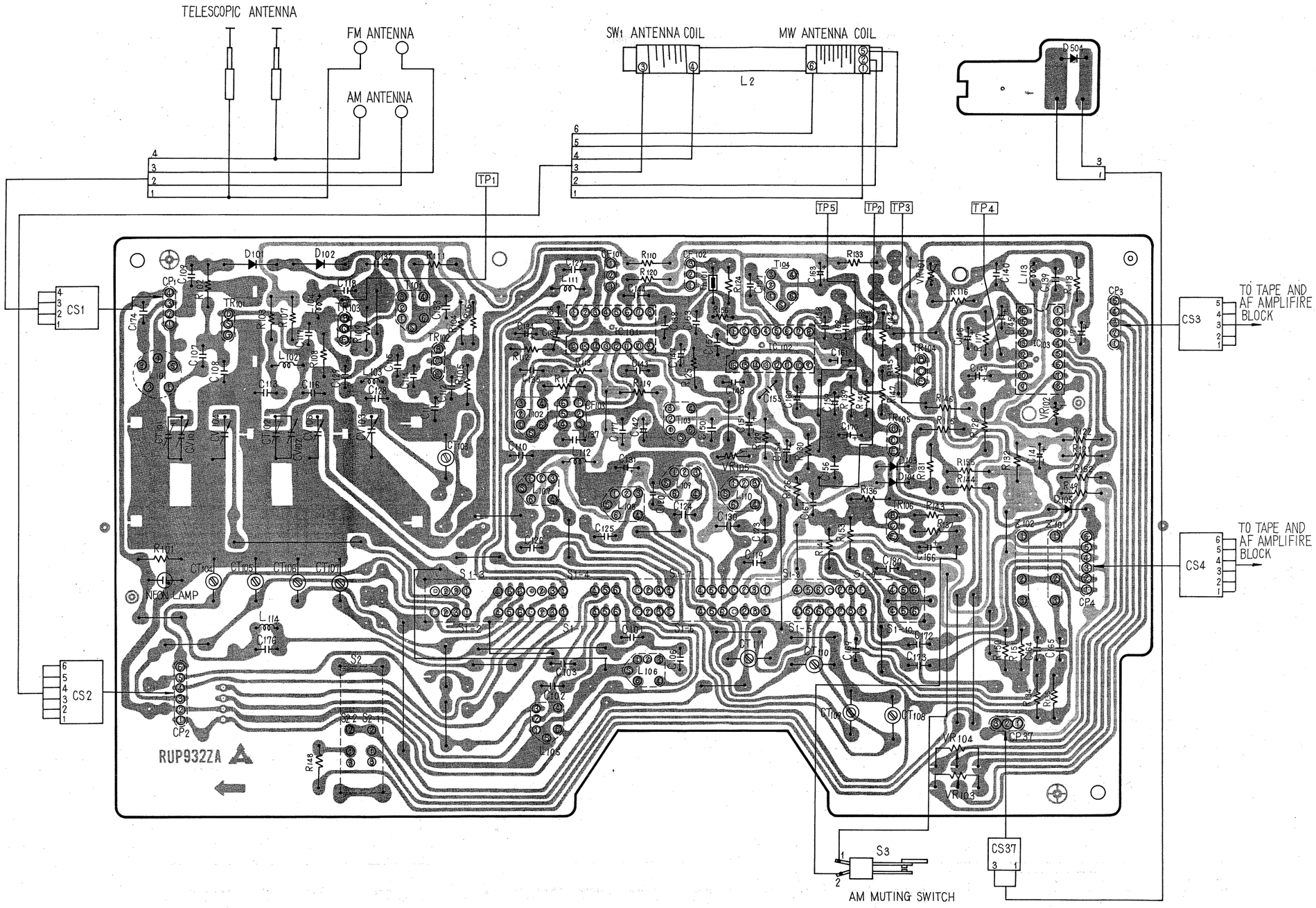

TR101

	FM
D	5.6V
G	0V
S	0V
Io	1.5mA

TR102

	FM
C	2.3V
B	1.4V
E	0.8V
Ie	0.8mA

TR103

	FM
C	5.9V
B	0.68V
E	0.015V
Ie	1.5mA

TR104

	FM	MUTING-ON with signal
C	3.4V	3.1V
B	0.1V	0.8V
E	0.5V	0.4V

TR105

	FM	MUTING-ON with signal
C	0.1V	0V
B	0.15V	0.6V
E	0V	0V

TR106

	When band switch turn
C	0V
B	0.68V
E	0V

IC101

	FM	AM		FM	AM
1	0V	0.72V	9	0V	0.55V
2	0V	0.72V	10	0V	4.3V
3	0V	0V	11	0V	2.5V
4	3.2V	0V	12	0V	1V
5	3.3V	0V	13	0V	4.1V
6	4.5V	0V	14	0V	4.1V
7	3.3V	0V	15	0V	4.1V
8	0V	0V	16	0V	3.4V

IC102

	FM	AM		FM	AM
1	1.2V	0V	9	0V	0.6V
2	1.2V	0V	10	0V	1.4V
3	1.2V	0V	11	0V	0.35V
4	4.7V	0V	12	0V	0.7V
5	1.4V	0V	13	0V	4.3V
6	3.9V	0V	14	0V	1.35V
7	3.6V	0V	15	0V	1.1V
8	0V	0V	16	0V	0V

IC103

	FM Auto		FM Auto
1	5.8V	9	5.8V
2	2.3V	10	2V
3	4V	11	2V
4	4.2V	12	1.95V
5	4.2V	13	2.1V
6	11.8V	14	2V
7	0V	15	2V
8	0.34V	16	2.5V

RS-4360DFT

SCHEMATIC DIAGRAM MODEL RS-4360DFT TAPE AND AF AMP BLOCK

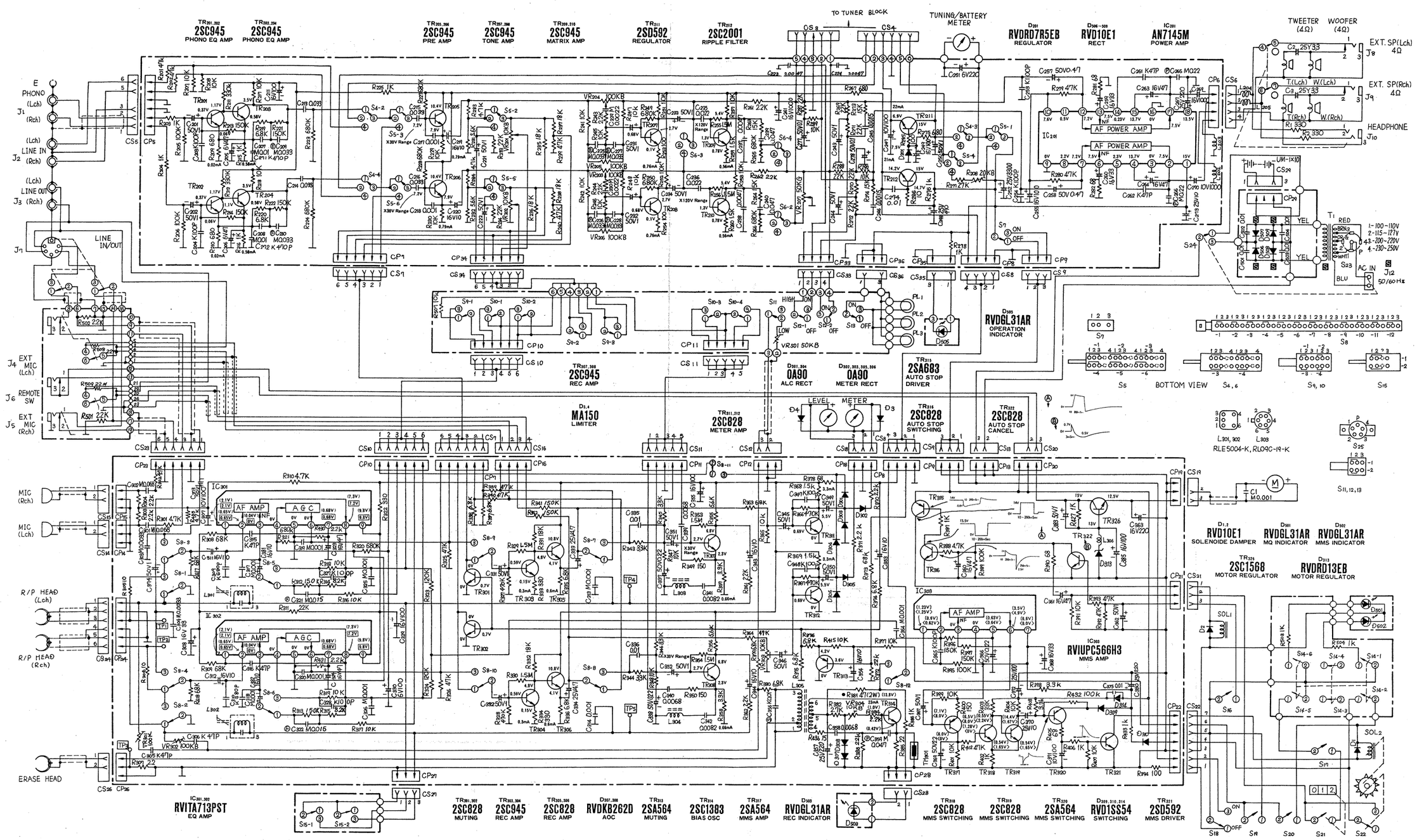

Notes:

1. S_{4-1}~S_{4-3}: Function switch in "PHONO" position.
2. S_{5-1}~S_{5-6}: Power switch in "SLEEP" position.
3. S_{6-1}~S_{6-3}: Mode switch in "STEREO WIDE" position.
4. S_7: Power switch in "OFF" position.
5. S_{8-1}~S_{8-12}: Recording/Play switch in "PLAY" position.
6. S_{9-1}~S_{9-3}: Rec switch in "MANUAL" position.
7. S_{10-1}~S_{10-4}: EQ switch in "NORMAL" position.
8. S_{11}: Bias switch in "NORMAL" position.
9. S_{12}: Loudness switch in "OFF" position.
10. S_{13}: Lamp switch in "OFF" position.
11. S_{14-1}~S_{14-6}: MPS/Memory switch in "OFF" position.
12. S_{15-1}, S_{15-2}: Edit switch in "OFF" position.
13. S_{16}: Solenoide time limit switch.
14. S_{17}: Rewind switch.
15. S_{18}: Tape power switch.
16. S_{19}: FF/Rewind switch.
17. S_{20}: Play switch.
18. S_{21}: Counter switch.
19. S_{22}: MPS switch.
20. S_{23}: AC voltage select switch.
21. S_{24}: AC/DC select switch in "DC" position.
22. DC voltage measurements are taken with circuit tester 100kΩ/V from earth.
    [ ].....Play back ( ).....Recording
    $TR_{301, 302, 313, 317, 318, 319}$, IC_{303}...MPS—ON, Play and FF or REWIND button push.
    〈 〉.....No signal 〔 〕.....with signal.
23. **S** indicates that only parts specified by the manufacturer be used for safety.

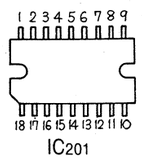

IC201

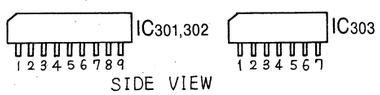

IC301,302 IC303

SIDE VIEW

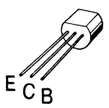

TR201~212
301~308
311~322,326

WIRING CONNECTION DIAGRAM MODEL RS-4360DFT TA

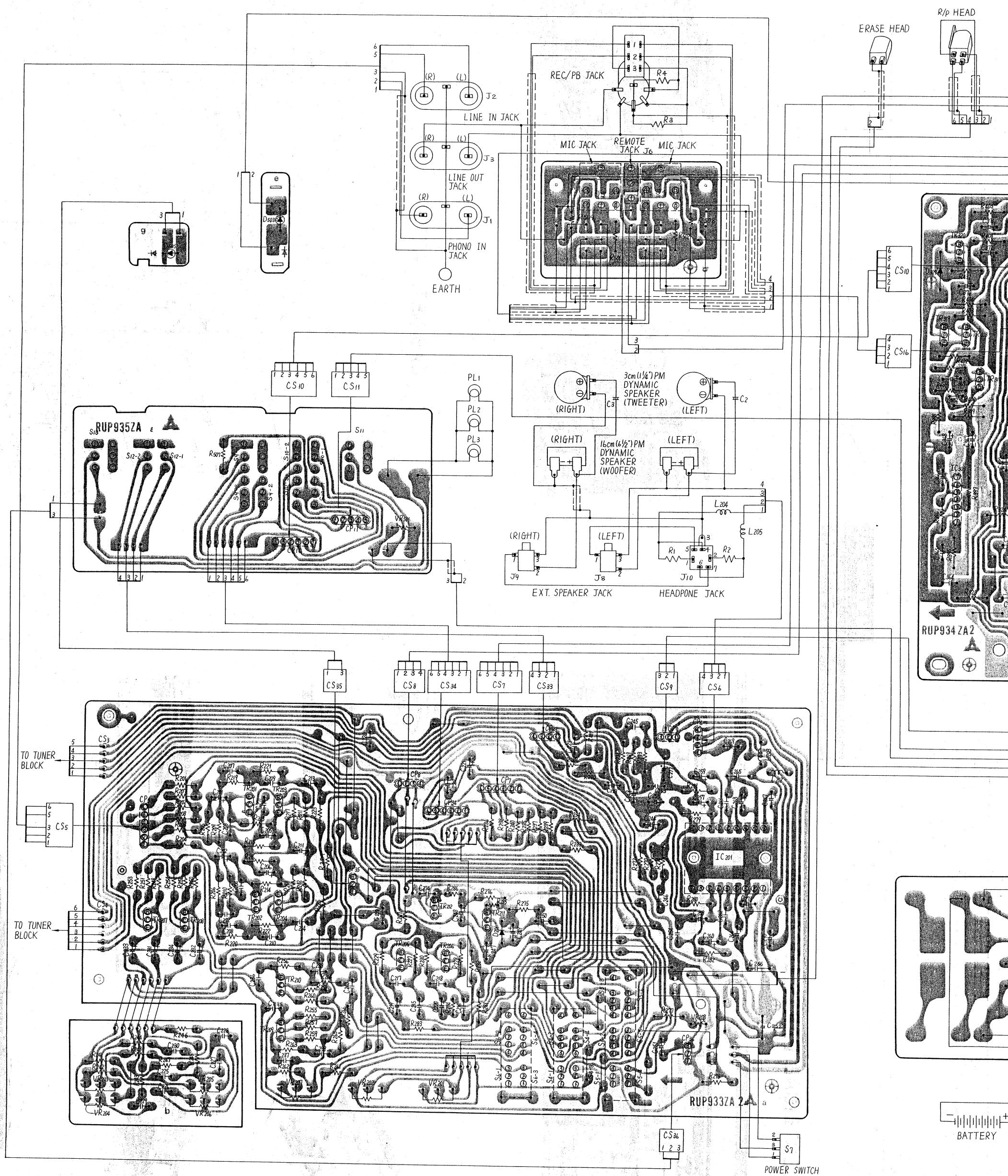

TR201,202

C	11.7V
B	0.37V
E	0.06V
Ie	0.02mA

TR203,204

C	3.5V
B	1.15V
E	0.58V
Ie	0.58mA

TR205,206

C	10.4V
B	7.2V×30V Range
E	7.9V
Ie	0.79mA

TR207,208

C	2.7V
B	0.68V
E	0.1V
Ie	0.76mA

TR209,210

C	5.4V
B	1.3V×120V Range
E	0.78V
Ie	0.56mA

TR211

C	15V
B	7.5V
E	6.9V
Ie	22mA

TR212

C	15V
B	14.7V
E	14.2V
Ie	21mA

TR301,302

	Play-FF or Rewind push
C	0V
B	0.7V
E	0V

TR303,304

C	4.8V.
B	0.59V
E	0.15V
Ie	0.3mA

TR305,306

C	10.8V
B	4.8V
E	4.1V
Ie	0.6mA

TR307,308

C	6.8V
B	2.7V×30V Range
E	2.36V
Ie	0.66mA

TR311,312

C	5.5V
B	0.69V
E	0V
Ie	3.3mA

TR313

C	0V
B	3.6V
E	4.2V

TR314

	REC
C	13.8V
B	1.0V
E	0.42V
Ie	23mA

ODEL RS-4360DFT TAPE AND AF AMP BLOCK

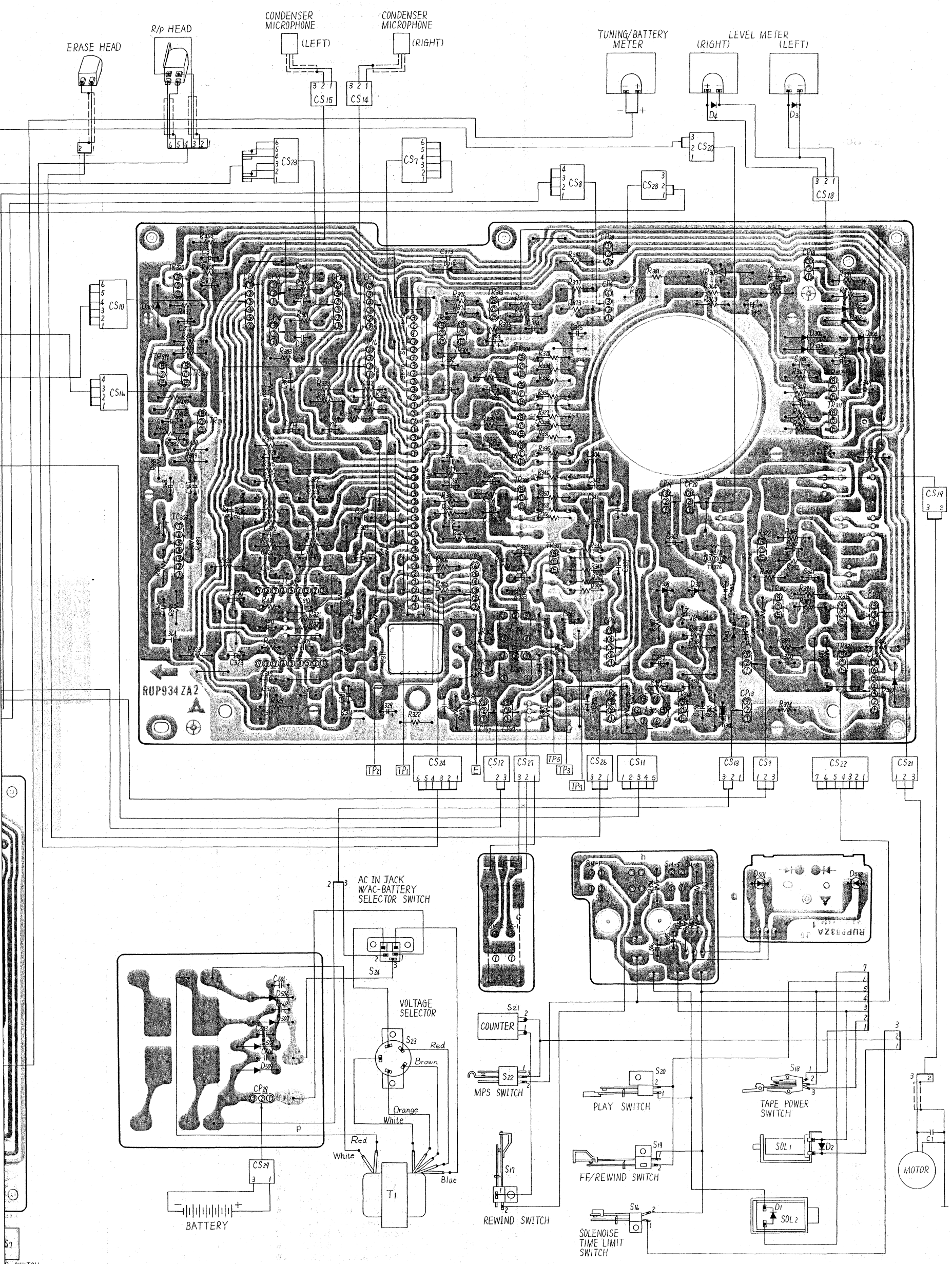

TR311,312

C	5.5V
B	0.69V
E	0V
Ie	3.3mA

TR313

C	0V
B	3.6V
E	4.2V

TR314

	REC
C	13.8V
B	1.0V
E	0.42V
Ie	23mA

TR317

	NO Signal	with Signal
C	0V	6.0V
B	8.0V	7.1V
E	8.0V	6.5V
Ic	0.48mA	0.48mA

TR318

	NO Signal	with Signal
C	2.24V	0.55V
B	0V	1.28V
E	1.65V	0.54V
Ie	0.44mA	0.44mA

TR319

	NO Signal	with Signal
C	1.67V	14.4V
B	2.34V	0.55V
E	1.65V	0.54V
Ie	1.4mA	1.4mA

IC201

1	15V	10	7.6V
2	7.5V	11	0.5V
3	0V	12	7.2V
4	13.7V	13	7.5V
5	0.23V	14	0.23V
6	7.5V	15	13.7V
7	7.2V	16	0V
8	2.2V	17	7.5V
9	0V	18	13.5V

IC301,302

	Playback	Recording
1	2.1V	2.1V
2	0.65V	0.65V
3	0V	0.63V
4	0V	0V
5	0V	0V
6	0V	0V
7	0.68V	0.63V
8	7.2V	7.3V
9	9.8V	9.8V

IC303

	NO Signal	with Signal
1	1.23V	1.23V
2	0.62V	0.6V
3	0V	0V
4	0V	0V
5	0.61V	0.63V
6	3.5V	3.5V
7	6.0V	6.6V

■REPLACEMENT PARTS LIST·····Model RS-4360DFT

(RD7812-1644C)

NOTES: 1.Part numbers are indicated on most mechanical parts.
Please use this part number for parts orders.
2. S indicates that only parts specified by the manufacturer's be used for safety.
3.The Ⓢ mark is service standard parts and may differ from production parts.
4.The ○ mark is used by the manufacturing plant only.

Ref. No.	Part No.	Part Name & Description	Per Set		Remarks
		MECHANICAL PARTS			
M1	RFE1Z	Lever,Safety	1		
M2	RFD9001Z	Lever Assembly,Auto-Stop Sensing	1		
M3	RFS1Z	Spring,R/P Head	1		
M4	RFD1Z	Spacer,Auto-Stop Sensing Lever	1		
M5	RFS2Z	Spring,Head Base	2		
M6	RFS3Z	Spring,Pinch Roller Assembly	1		
M7	RFD2Z	Spacer,Auto-Stop Sensing Lever	1		
M8	RFD3Z	Pinch Roller Assembly	1		
M9	RFS4Z	Spring,Pinch Roller Assembly	1		
M10	RFD9002Z	Clutch Assembly	1		
M11	RFE2Z	Fast Forward Idler Assembly	1		
M12	RFS5Z	Spring,Fast Forward Idler Assembly	1		
M13	RFD4Z	Lever,Fast Forward	1		
M14	RFS6Z	Spring,Fast Forward Lever & Rewind Lever	2		
M15	RFD5Z	Lever,Rewind	1		
M16	RFS7Z	Spring,Brake Arm	1		
M17	RFE3Z	Idler,Rewind	1		
M18	RFS8Z	Spring,Rewind Idler	1		
M19	RFS9Z	Spring,Flywheel	1		
M20	RFF1Z	Flywheel	1		
M21	RFD6Z	Bracket,Flywheel	1		
M22	RFS10Z	Spring,Flywheel	1		
M23	XSS2+5	Screw,Auto-Stop Sensing Lever Assembly M'tg	1		
M24	XYN2+5	Screw,Flywheel Holder & etc.M'tg	8		
M25	XSN2+6	Screw,R/P Head M'tg & Azimuth Adjusting	1		
M26	XYN2.6+7	Screw,Plunger Bracket M'tg	2		
M27	XSB2.6+4	Screw,Head Base M'tg	1		
M28	XSN2.6+10	Screw,Flywheel Bracket M'tg	1		
M29	XUC12FY	Circlip,Reel Table M'tg	2		
M30	XUC15FY	Circlip,Pause Lever & etc.M'tg	4		
M31	XUC19FY	Circlip,Pinch Roller M'tg	1		
M32	XUC2FY	Circlip,Clutch Assembly & etc.M'tg	2		
M33	XUC25FY	Circlip,Review Bracket & etc.M'tg	2		
M34	XUC32FY	Circlip,Fast Forward & Rewind Lever M'tg	1		
M35	XUC4FY	Circlip,Fast Forward Idler Assembly & etc.M'tg	2		
M36	RFN1Z	Nylon Washer,Fast Forward & Rewind Lever	1		
M37	XWG26	Washer,Stopper,Motor & etc.	4		

1

Ref. No.	Part No.	Part Name & Description	Per Set		Remarks
M38	XWG2	Washer,R/P Head	1		
M39	RFN2Z	Nylon Washer,Flywheel	1		
M40	RFN3Z	Nylon Washer,Flywheel	1		
M41	MMC6A2HXA	DC Motor	1		○
M42	RSE60Z-T	Tape Counter	1		
M43	RFD7Z	Bracket,Head Base	1		
M44	RFD8Z	Steel Ball,Head Base Bracket	1		
M45	RFS11Z	Retainer,Cassette tape	1		
M46	RFD9Z	Button Mechanism Assembly	1		
M47	RFS12Z	Spring,Safety Lever	1		
M48	RFD10Z	Spacer,Eject Stopper	1		
M49	RFD11Z	Lever,Play	1		
M50	RFD12Z	Spacer,Play Lever	1		
M51	RFE4Z	Reel Table	2		
M52	RFS13Z	Spring,Reel Table	1		
M53	RFE5Z	Holder,Flywheel Shaft	1		
M54	RFD13Z	Bracket,Flywheel Holder	1		
M55	RFD14Z	Bracket,Motor	1		
M56	RFB1Z	Belt,Motor	1		
M57	RFD15Z	Spacer,Motor	2		
M58	RFI1Z	Rubber,Motor	2		
M59	RFI2Z	Rubber,Motor	2		
M60	RFQ1Z	Motor Pulley	1		
M61	RFD16Z	Pawl,Eject	1		
M62	RFS14Z	Spring,Eject Pawl	1		
M63	RFD17Z	Spacer,Eject Pawl	1		
M64	RFD18Z	Lever,Eject	1		
M65	RFS15Z	Spring,Eject Lever	1		
M66	RFD19Z	Stopper,Eject Lever	1		
M67	RFD20Z	Spacer,Eject Lever	1		
M68	RFD21Z	Spacer,Eject Lever	1		
M69	RFS16Z	Spring,Auto Lever	1		
M70	RFS17Z	Spring,Lever	1		
M71	RFD22Z	Lever,Arm	1		
M72	RFD23Z	Spacer,Arm Lever	1		
M73	RFB2Z	Belt,Tape Counter	1		
M74	RFS18Z	Spring,Pause Lever	1		
M75	RFD24Z	Lever,Pause	1		
M76	RFD25Z	Lever,Review	1		
M77	RFD26Z	Bracket,Review	1		
M78	RFD27Z	Stopper,Edit	1		
M79	RFD28Z	Spacer,R/P Head	1		
M80	RFD29Z	Spacer,Erase Head	2		
M81	RFS19Z	Spring,Review Lever	1		
M82	XSN2.6+6	Screw,Motor M'tg	2		
M83	XSB2.6+6	Screw,Eject Lever Stopper & etc. M'tg	2		
M84	XSN2+10	Screw,R/P & Erase Head M'tg	3		
M85	XYN2+8	Screw,Tape Power Switch M'tg	2		
M86	XYN2.6+5	Screw,Flywheel Bracket & etc.M'tg	6		
M87	XTN2.6+4H	Screw,Motor Bracket & etc.M'tg	12		
M88	XSS3+5	Screw,Tape Counter M'tg	2		
M89	XYN2.6+8	Screw,Edit Stopper M'tg	1		
M90	XYN2.6+6	Screw,Eject Pawl & etc.M'tg	3		
M91	RFN4Z	Nylon Washer,Fast Forward & Rewind	1		
M92	RFD30Z	Stopper,Safety Lever	1		
M93	RFD31Z	Lead Clamper,Erase Head	1		

2

Ref. No.	Part No.	Part Name & Description	Per Set		Remarks
M94	XTN2.6+6H	Screw,Eject Lever M'tg	1		
M95	RFP9001Z	Plunger Assembly	1		
M96	RFD9003Z	Plunger Bracket Assembly	1		
M97	RFD32Z	Bracket,Plunger	1		
M98	RFD33Z	Bracket,Leaf Switch	1		
M99	RFD34Z	Bracket,Leaf Switch	1		
M100	RFS20Z	Spring,Clutch Assembly	1		
		RESISTORS			
R1	ERD25TJ331	Carbon Resistor, 330Ω, ¼W	1		Ⓢ
R2	ERD25TJ331	Carbon Resistor, 330Ω, ¼W	1		Ⓢ
R101	ERD25TJ474	Carbon Resistor, 470KΩ, ¼W	1		Ⓢ
R102	ERD25TJ104	Carbon Resistor, 100KΩ, ¼W	1		Ⓢ
R103	ERD25TJ221	Carbon Resistor, 220Ω, ¼W	1		Ⓢ
R104	ERD25TJ472	Carbon Resistor, 4.7KΩ, ¼W	1		Ⓢ
R105	ERD25TJ102	Carbon Resistor, 1KΩ, ¼W	1		Ⓢ
R106	ERD25TJ683	Carbon Resistor, 68KΩ, ¼W	1		Ⓢ
R107	ERD25TJ823	Carbon Resistor, 82KΩ, ¼W	1		Ⓢ
R108	ERD25TJ183	Carbon Resistor, 18KΩ, ¼W	1		Ⓢ
R109	ERD25TJ100	Carbon Resistor, 10Ω, ¼W	1		Ⓢ
R110	ERD25TJ221	Carbon Resistor, 220Ω, ¼W	1		Ⓢ
R111	ERD25TJ331	Carbon Resistor, 330Ω, ¼W	1		Ⓢ
R112	ERD25TJ680	Carbon Resistor, 68Ω, ¼W	1		Ⓢ
R113	ERD25TJ101	Carbon Resistor, 100Ω, ¼W	1		Ⓢ
R114	ERD25TJ222	Carbon Resistor, 2.2KΩ, ¼W	1		Ⓢ
R115	ERD25TJ103	Carbon Resistor, 10KΩ, ¼W	1		Ⓢ
R116	ERD25TJ682	Carbon Resistor, 6.8KΩ, ¼W	1		Ⓢ
R117	ERD25TJ332	Carbon Resistor, 3.3KΩ, ¼W	1		Ⓢ
R118	ERD25TJ224	Carbon Resistor, 220KΩ, ¼W	1		Ⓢ
R119	ERD25TJ470	Carbon Resistor, 47Ω, ¼W	1		Ⓢ
R120	ERD25TJ470	Carbon Resistor, 47Ω, ¼W	1		Ⓢ
R121	ERD25TJ222	Carbon Resistor, 2.2KΩ, ¼W	1		Ⓢ
R122	ERD25TJ222	Carbon Resistor, 2.2KΩ, ¼W	1		Ⓢ
R124	ERD25TJ331	Carbon Resistor, 330Ω, ¼W	1		Ⓢ
R125	ERD25TJ474	Carbon Resistor, 470KΩ, ¼W	1		Ⓢ
R126	ERD25TJ104	Carbon Resistor, 100KΩ, ¼W	1		Ⓢ
R128	ERD25TJ473	Carbon Resistor, 47KΩ, ¼W	1		Ⓢ
R129	ERD25TJ221	Carbon Resistor, 220Ω, ¼W	1		Ⓢ
R130	ERD25TJ222	Carbon Resistor, 2.2KΩ, ¼W	1		Ⓢ
R131	ERD25TJ153	Carbon Resistor, 15KΩ, ¼W	1		Ⓢ
R132	ERD25TJ680	Carbon Resistor, 68Ω, ¼W	1		Ⓢ
R133	ERD25TJ151	Carbon Resistor, 150Ω, ¼W	1		Ⓢ
R134	ERD25TJ684	Carbon Resistor, 680KΩ, ¼W	1		Ⓢ
R135	ERD25TJ684	Carbon Resistor, 680KΩ, ¼W	1		Ⓢ
R136	ERD25TJ684	Carbon Resistor, 680KΩ, ¼W	1		Ⓢ
R137	ERD25TJ103	Carbon Resistor, 10KΩ, ¼W	1		Ⓢ
R139	ERD25TJ103	Carbon Resistor, 10KΩ, ¼W	1		Ⓢ
R140	ERD25TJ103	Carbon Resistor, 10KΩ, ¼W	1		Ⓢ
R141	ERD25TJ333	Carbon Resistor, 33KΩ, ¼W	1		Ⓢ
R142	ERD25TJ474	Carbon Resistor, 470KΩ, ¼W	1		Ⓢ
R143	ERD25TJ104	Carbon Resistor, 100KΩ, ¼W	1		Ⓢ
R144	ERD25TJ222	Carbon Resistor, 2.2KΩ, ¼W	1		Ⓢ
R145	ERD25TJ155	Carbon Resistor, 1.5MΩ, ¼W	1		Ⓢ

3

Ref. No.	Part No.	Part Name & Description	Per Set		Remarks
R146	ERD25TJ103	Carbon Resistor, 10KΩ, ¼W	1		Ⓢ
R147	ERD25TJ152	Carbon Resistor, 1.5KΩ, ¼W	1		Ⓢ
R148	ERD25TJ471	Carbon Resistor, 470Ω, ¼W	1		Ⓢ
R149	ERD25TJ332	Carbon Resistor, 3.3KΩ, ¼W	1		Ⓢ
R150	ERD25TJ684	Carbon Resistor, 680KΩ, ¼W	1		Ⓢ
R151	ERD25TJ684	Carbon Resistor, 680KΩ, ¼W	1		Ⓢ
R152	ERD25TJ102	Carbon Resistor, 1KΩ, ¼W	1		Ⓢ
R153	ERD25TJ153	Carbon Resistor, 15KΩ, ¼W	1		Ⓢ
R155	ERD25TJ822	Carbon Resistor, 8.2KΩ, ¼W	1		Ⓢ
R156	ERD25TJ820	Carbon Resistor, 82Ω, ¼W	1		Ⓢ
R201	ERD25TJ473	Carbon Resistor, 47KΩ, ¼W	1		Ⓢ
R202	ERD25TJ473	Carbon Resistor, 47KΩ, ¼W	1		Ⓢ
R203	ERD25TJ102	Carbon Resistor, 1KΩ, ¼W	1		Ⓢ
R204	ERD25TJ102	Carbon Resistor, 1KΩ, ¼W	1		Ⓢ
R205	ERD25TJ104	Carbon Resistor, 100KΩ, ¼W	1		Ⓢ
R206	ERD25TJ104	Carbon Resistor, 100KΩ, ¼W	1		Ⓢ
R207	ERD25TJ103	Carbon Resistor, 10KΩ, ¼W	1		Ⓢ
R208	ERD25TJ103	Carbon Resistor, 10KΩ, ¼W	1		Ⓢ
R209	ERD25TJ681	Carbon Resistor, 680Ω, ¼W	1		Ⓢ
R210	ERD25TJ681	Carbon Resistor, 680Ω, ¼W	1		Ⓢ
R211	ERD25TJ334	Carbon Resistor, 330KΩ, ¼W	1		Ⓢ
R212	ERD25TJ334	Carbon Resistor, 330KΩ, ¼W	1		Ⓢ
R213	ERD25TJ154	Carbon Resistor, 150KΩ, ¼W	1		Ⓢ
R214	ERD25TJ154	Carbon Resistor, 150KΩ, ¼W	1		Ⓢ
R215	ERD25TJ102	Carbon Resistor, 1KΩ, ¼W	1		Ⓢ
R216	ERD25TJ102	Carbon Resistor, 1KΩ, ¼W	1		Ⓢ
R217	ERD25TJ103	Carbon Resistor, 10KΩ, ¼W	1		Ⓢ
R218	ERD25TJ103	Carbon Resistor, 10KΩ, ¼W	1		Ⓢ
R219	ERD25TJ682	Carbon Resistor, 6.8KΩ, ¼W	1		Ⓢ
R220	ERD25TJ682	Carbon Resistor, 6.8KΩ, ¼W	1		Ⓢ
R221	ERD25TJ154	Carbon Resistor, 150KΩ, ¼W	1		Ⓢ
R222	ERD25TJ154	Carbon Resistor, 150KΩ, ¼W	1		Ⓢ
R223	ERD25TJ684	Carbon Resistor, 680KΩ, ¼W	1		Ⓢ
R224	ERD25TJ684	Carbon Resistor, 680KΩ, ¼W	1		Ⓢ
R225	ERD25TJ102	Carbon Resistor, 1KΩ, ¼W	1		Ⓢ
R227	ERD25TJ684	Carbon Resistor, 680KΩ, ¼W	1		Ⓢ
R228	ERD25TJ684	Carbon Resistor, 680KΩ, ¼W	1		Ⓢ
R229	ERD25TJ103	Carbon Resistor, 10KΩ, ¼W	1		Ⓢ
R230	ERD25TJ103	Carbon Resistor, 10KΩ, ¼W	1		Ⓢ
R231	ERD25TJ562	Carbon Resistor, 5.6KΩ, ¼W	1		Ⓢ
R232	ERD25TJ562	Carbon Resistor, 5.6KΩ, ¼W	1		Ⓢ
R233	ERD25TJ223	Carbon Resistor, 22KΩ, ¼W	1		Ⓢ
R234	ERD25TJ223	Carbon Resistor, 22KΩ, ¼W	1		Ⓢ
R235	ERD25TJ183	Carbon Resistor, 18KΩ, ¼W	1		Ⓢ
R236	ERD25TJ183	Carbon Resistor, 18KΩ, ¼W	1		Ⓢ
R237	ERD25TJ183	Carbon Resistor, 18KΩ, ¼W	1		Ⓢ
R238	ERD25TJ183	Carbon Resistor, 18KΩ, ¼W	1		Ⓢ
R239	ERD25TJ473	Carbon Resistor, 47KΩ, ¼W	1		Ⓢ
R240	ERD25TJ473	Carbon Resistor, 47KΩ, ¼W	1		Ⓢ
R241	ERD25TJ103	Carbon Resistor, 10KΩ, ¼W	1		Ⓢ
R242	ERD25TJ103	Carbon Resistor, 10KΩ, ¼W	1		Ⓢ
R243	ERD25TJ222	Carbon Resistor, 2.2KΩ, ¼W	1		Ⓢ
R244	ERD25TJ222	Carbon Resistor, 2.2KΩ, ¼W	1		Ⓢ
R245	ERD25TJ103	Carbon Resistor, 10KΩ, ¼W	1		Ⓢ
R246	ERD25TJ103	Carbon Resistor, 10KΩ, ¼W	1		Ⓢ
R247	ERD25TJ103	Carbon Resistor, 10KΩ, ¼W	1		Ⓢ
R248	ERD25TJ103	Carbon Resistor, 10KΩ, ¼W	1		Ⓢ

4

RS-4360DFT

RS-4360DFT

RS-4360DFT RS-4360DFT

ELECTRICAL PARTS LOCATION

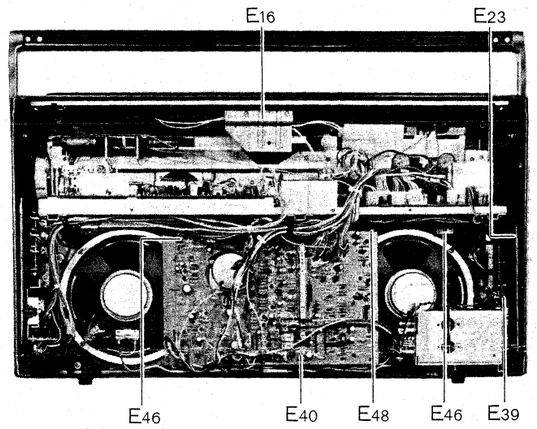

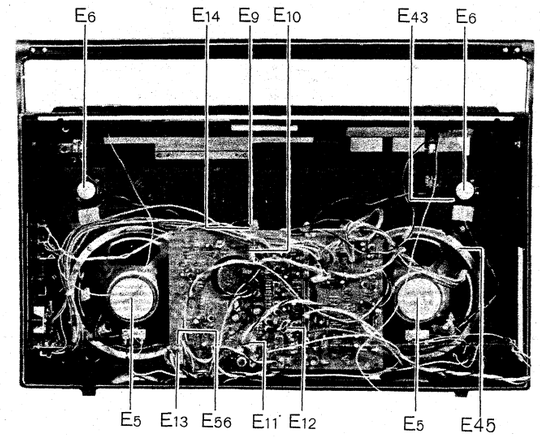

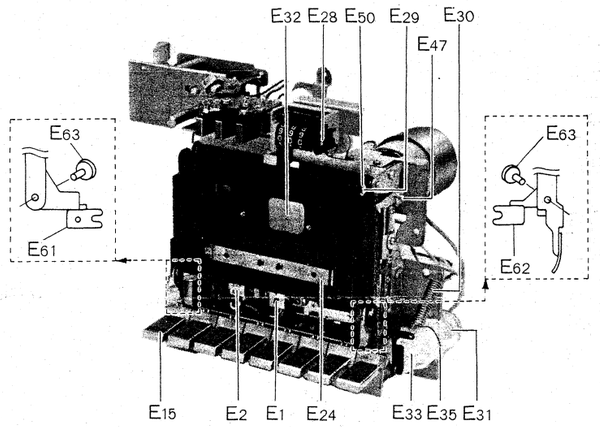

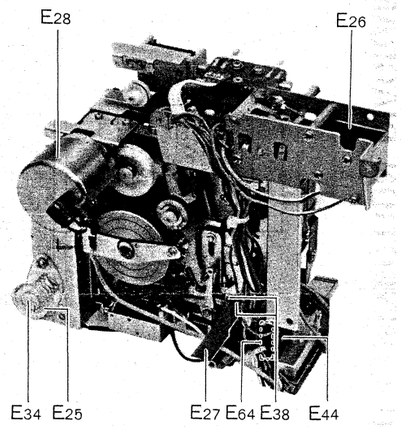

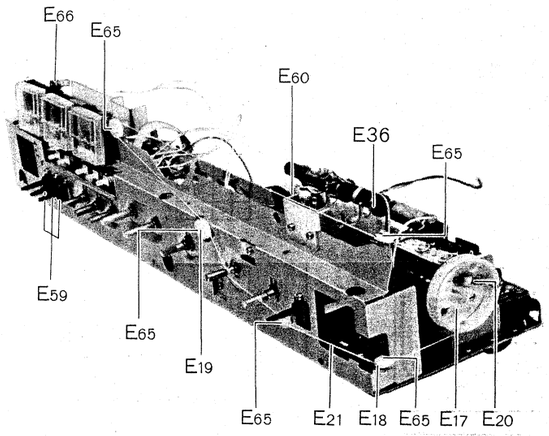

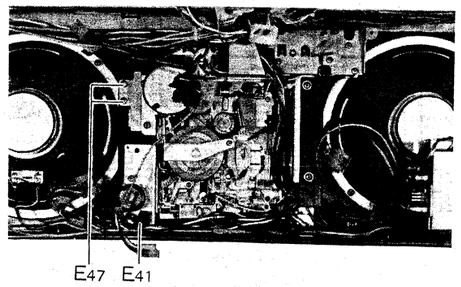

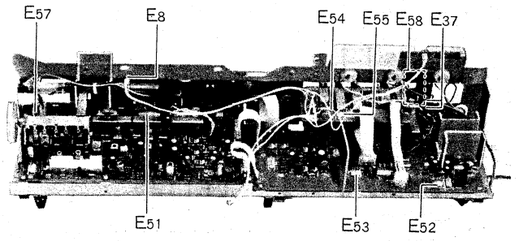

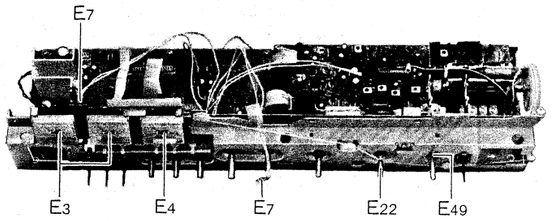

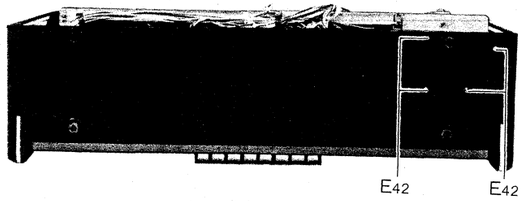

CABINET PARTS

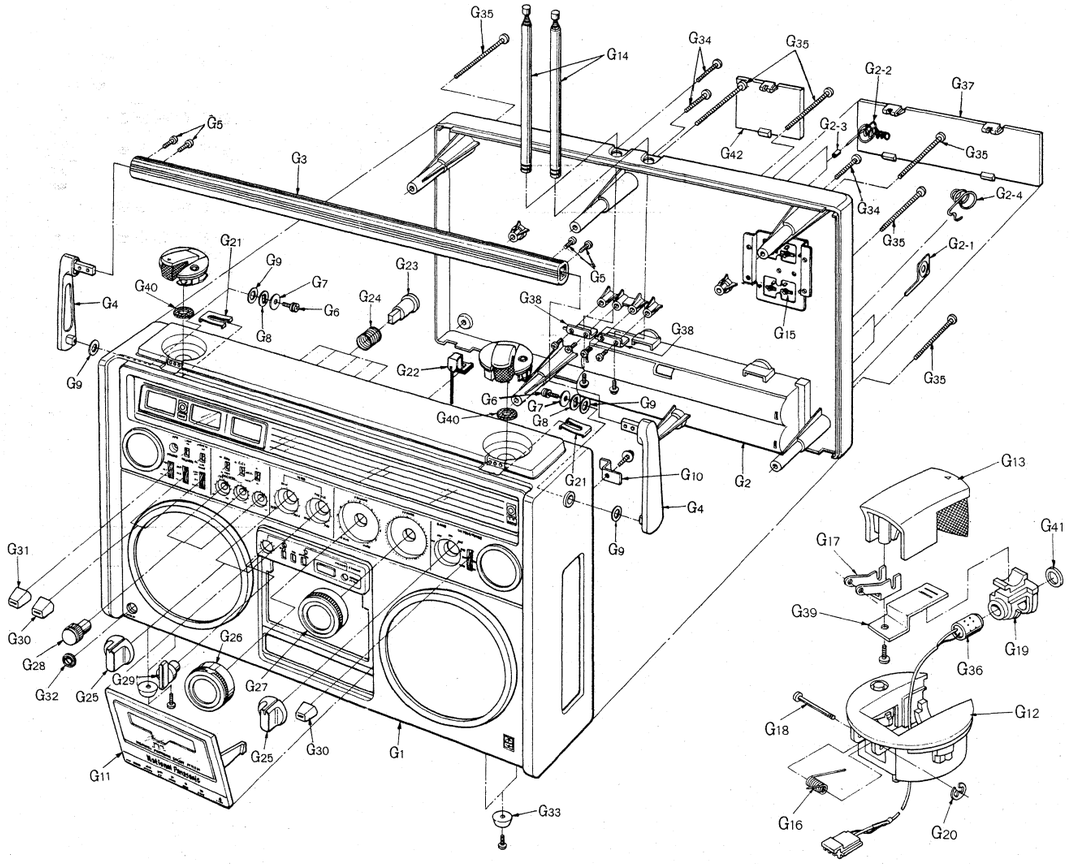

ELECTRICAL PARTS LOCATION

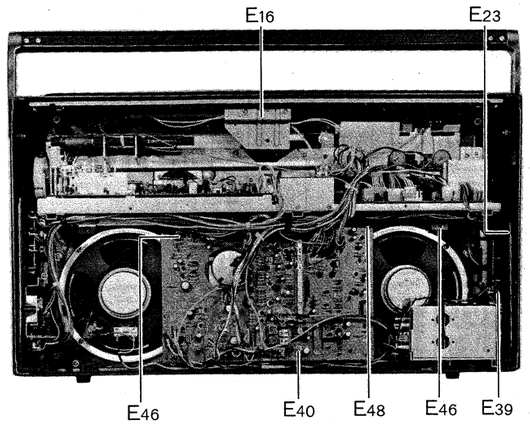

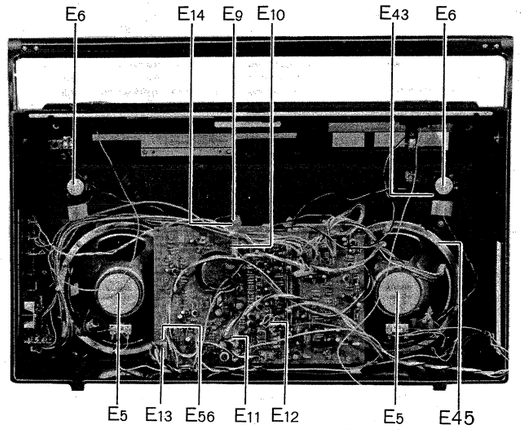

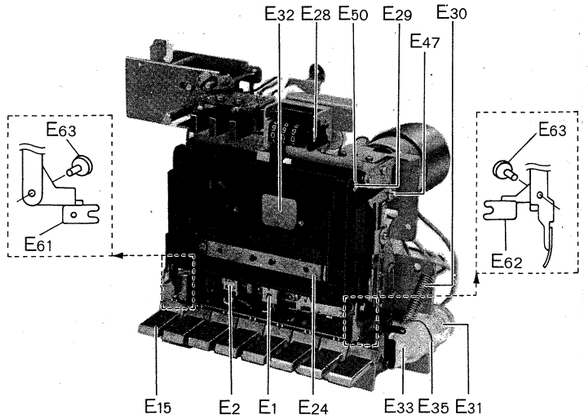

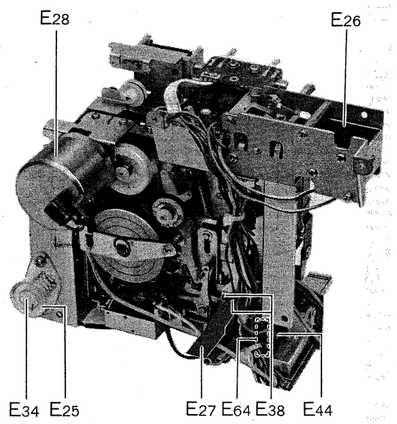

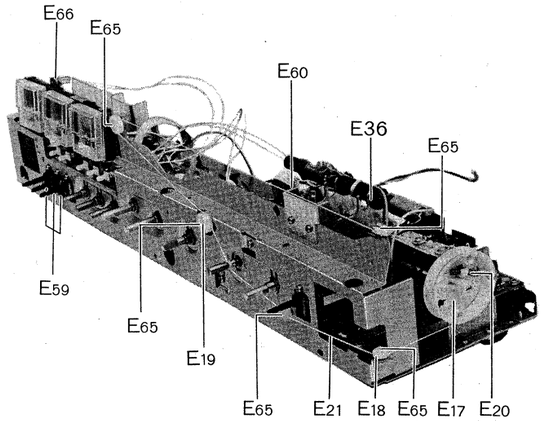

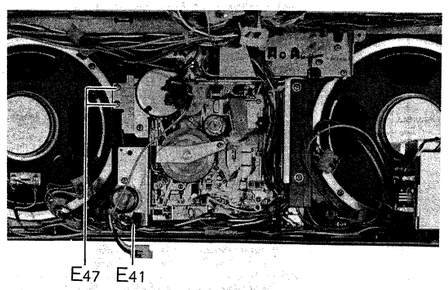

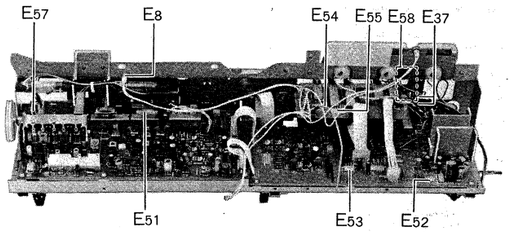

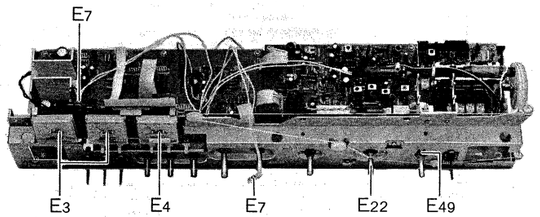

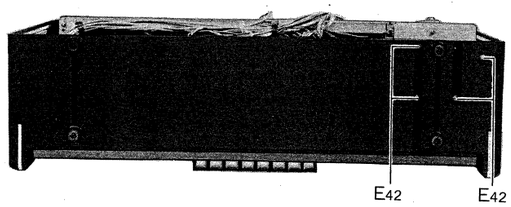

CABINET PARTS

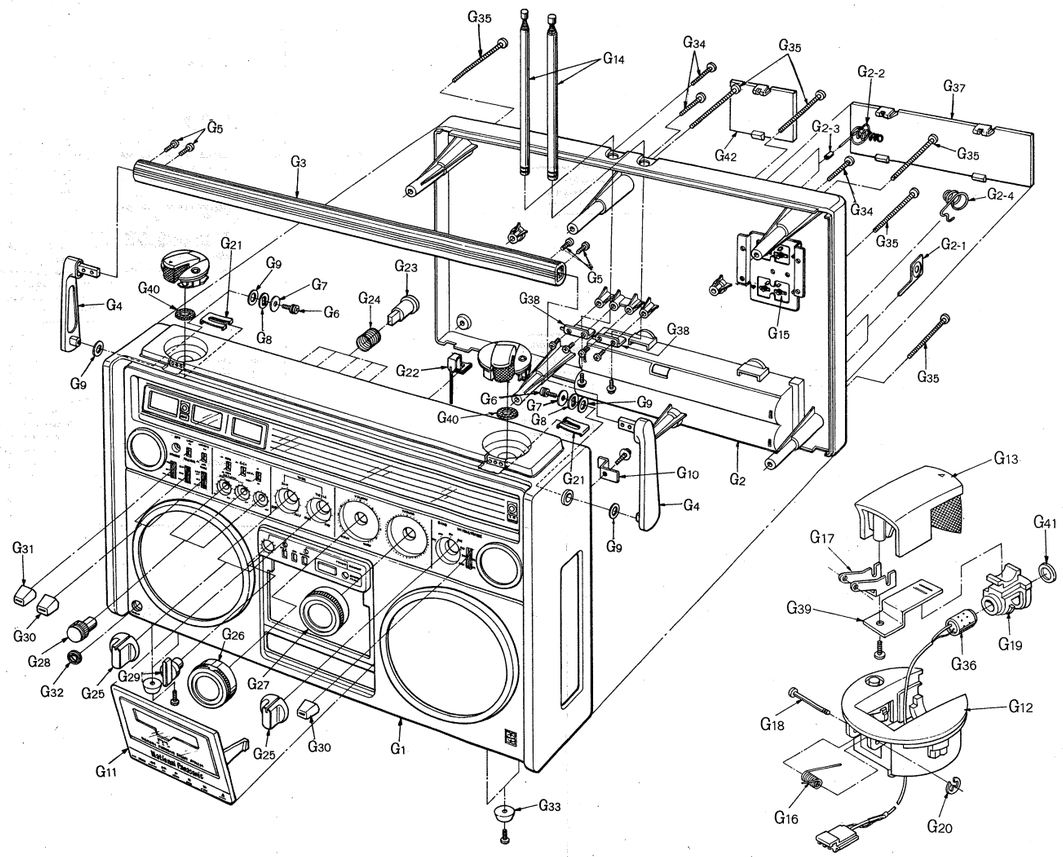

■REPLACEMENT PARTS LIST·····Model RS-4360DFT

(RD7812-1644C)

NOTES: 1. Part numbers are indicated on most mechanical parts.
Please use this part number for parts orders.
2. Ⓢ indicates that only parts specified by the manufacturer's be used for safety.
3. The Ⓢ mark is service standard parts and may differ from production parts.
4. The ○ mark is used by the manufacturing plant only.

Ref. No.	Part No.	Part Name & Description	Per Set	Remarks
		MECHANICAL PARTS		
M1	RFE1Z	Lever, Safety	1	
M2	RFD9001Z	Lever Assembly, Auto-Stop Sensing	1	
M3	RFS1Z	Spring, R/P Head	1	
M4	RFD1Z	Spacer, Auto-Stop Sensing Lever	1	
M5	RFS2Z	Spring, Head Base	2	
M6	RFS3Z	Spring, Pinch Roller Assembly	1	
M7	RFD2Z	Spacer, Auto-Stop Sensing Lever	1	
M8	RFD3Z	Pinch Roller Assembly	1	
M9	RFS4Z	Spring, Pinch Roller Assembly	1	
M10	RFD9002Z	Clutch Assembly	1	
M11	RFE2Z	Fast Forward Idler Assembly	1	
M12	RFS5Z	Spring, Fast Forward Idler Assembly	1	
M13	RFD4Z	Lever, Fast Forward	1	
M14	RFS6Z	Spring, Fast Forward Lever & Rewind Lever	2	
M15	RFD5Z	Lever, Rewind	1	
M16	RFS7Z	Spring, Brake Arm	1	
M17	RFE3Z	Idler, Rewind	1	
M18	RFS8Z	Spring, Rewind Idler	1	
M19	RFS9Z	Spring, Flywheel	1	
M20	RFF1Z	Flywheel	1	
M21	RFD6Z	Bracket, Flywheel	1	
M22	RFS10Z	Spring, Flywheel	1	
M23	XSS2+5	Screw, Auto-Stop Sensing Lever Assembly M'tg	1	
M24	XYN2+5	Screw, Flywheel Holder & etc. M'tg	8	
M25	XSN2+6	Screw, R/P Head M'tg & Azimuth Adjusting	1	
M26	XYN2.6+7	Screw, Plunger Bracket M'tg	2	
M27	XSB2.6+4	Screw, Head Base M'tg	1	
M28	XSN2.6+10	Screw, Flywheel Bracket M'tg	1	
M29	XUC12FY	Circlip, Reel Table M'tg	2	
M30	XUC15FY	Circlip, Pause Lever & etc. M'tg	4	
M31	XUC19FY	Circlip, Pinch Roller M'tg	1	
M32	XUC2FY	Circlip, Clutch Assembly & etc. M'tg	2	
M33	XUC25FY	Circlip, Review Bracket & etc. M'tg	2	
M34	XUC32FY	Circlip, Fast Forward & Rewind Lever M'tg	1	
M35	XUC4FY	Circlip, Fast Forward Idler Assembly & etc. M'tg	2	
M36	RFN1Z	Nylon Washer, Fast Forward & Rewind Lever	1	
M37	XWG26	Washer, Stopper, Motor & etc.	4	

1

Ref. No.	Part No.	Part Name & Description	Per Set	Remarks
M38	XWG2	Washer, R/P Head	1	
M39	RFN2Z	Nylon Washer, Flywheel	1	
M40	RFN3Z	Nylon Washer, Flywheel	1	
M41	MMC6A2HXA	DC Motor	1	○
M42	RSE60Z-T	Tape Counter	1	
M43	RFD7Z	Bracket, Head Base	1	
M44	RFD8Z	Steel Ball, Head Base Bracket	1	
M45	RFS11Z	Retainer, Cassette tape	1	
M46	RFD9Z	Button Mechanism Assembly	1	
M47	RFS12Z	Spring, Safety Lever	1	
M48	RFD10Z	Spacer, Eject Stopper	1	
M49	RFD11Z	Lever, Play	1	
M50	RFD12Z	Spacer, Play Lever	1	
M51	RFE4Z	Reel Table	2	
M52	RFS13Z	Spring, Reel Table	1	
M53	RFE5Z	Holder, Flywheel Shaft	1	
M54	RFD13Z	Bracket, Flywheel Holder	1	
M55	RFD14Z	Bracket, Motor	1	
M56	RFB1Z	Belt, Motor	1	
M57	RFD15Z	Spacer, Motor	2	
M58	RFI1Z	Rubber, Motor	2	
M59	RFI2Z	Rubber, Motor	2	
M60	RFQ1Z	Motor Pulley	1	
M61	RFD16Z	Pawl, Eject	1	
M62	RFS14Z	Spring, Eject Pawl	1	
M63	RFD17Z	Spacer, Eject Pawl	1	
M64	RFD18Z	Lever, Eject	1	
M65	RFS15Z	Spring, Eject Lever	1	
M66	RFD19Z	Stopper, Eject Lever	1	
M67	RFD20Z	Spacer, Eject Lever	1	
M68	RFD21Z	Spacer, Eject Lever	1	
M69	RFS16Z	Spring, Auto Lever	1	
M70	RFS17Z	Spring, Lever	1	
M71	RFD22Z	Lever, Arm	1	
M72	RFD23Z	Spacer, Arm Lever	1	
M73	RFB2Z	Belt, Tape Counter	1	
M74	RFS18Z	Spring, Pause Lever	1	
M75	RFD24Z	Lever, Pause	1	
M76	RFD25Z	Lever, Review	1	
M77	RFD26Z	Bracket, Review	1	
M78	RFD27Z	Stopper, Edit	1	
M79	RFD28Z	Spacer, R/P Head	1	
M80	RFD29Z	Spacer, Erase Head	2	
M81	RFS19Z	Spring, Review Lever	1	
M82	XSN2.6+6	Screw, Motor M'tg	2	
M83	XSB2.6+6	Screw, Eject Lever Stopper & etc. M'tg	2	
M84	XSN2+10	Screw, R/P & Erase Head M'tg	3	
M85	XYN2+8	Screw, Tape Power Switch M'tg	2	
M86	XYN2.6+5	Screw, Flywheel Bracket & etc. M'tg	6	
M87	XTN2.6+4H	Screw, Motor Bracket & etc. M'tg	12	
M88	XSS3+5	Screw, Tape Counter M'tg	2	
M89	XYN2.6+8	Screw, Edit Stopper M'tg	1	
M90	XYN2.6+6	Screw, Eject Pawl & etc. M'tg	3	
M91	RFN4Z	Nylon Washer, Fast Forward & Rewind	1	
M92	RFD30Z	Stopper, Safety Lever	1	
M93	RFD31Z	Lead Clamper, Erase Head	1	

2

RS-4360DFT

12

Ref. No.	Part No.	Part Name & Description	Per Set	Remarks
M94	XTN2.6+6H	Screw, Eject Lever M'tg	1	
M95	RFP9001Z	Plunger Assembly	1	
M96	RFD9003Z	Plunger Bracket Assembly	1	
M97	RFD32Z	Bracket, Plunger	1	
M98	RFD33Z	Bracket, Leaf Switch	1	
M99	RFD34Z	Bracket, Leaf Switch	1	
M100	RFS20Z	Spring, Clutch Assembly	1	
		RESISTORS		
R1	ERD25TJ331	Carbon Resistor, 330Ω, ¼W	1	Ⓢ
R2	ERD25TJ331	Carbon Resistor, 330Ω, ¼W	1	Ⓢ
R101	ERD25TJ474	Carbon Resistor, 470KΩ, ¼W	1	Ⓢ
R102	ERD25TJ104	Carbon Resistor, 100KΩ, ¼W	1	Ⓢ
R103	ERD25TJ221	Carbon Resistor, 220Ω, ¼W	1	Ⓢ
R104	ERD25TJ472	Carbon Resistor, 4.7KΩ, ¼W	1	Ⓢ
R105	ERD25TJ102	Carbon Resistor, 1KΩ, ¼W	1	Ⓢ
R106	ERD25TJ683	Carbon Resistor, 68KΩ, ¼W	1	Ⓢ
R107	ERD25TJ823	Carbon Resistor, 82KΩ, ¼W	1	Ⓢ
R108	ERD25TJ183	Carbon Resistor, 18KΩ, ¼W	1	Ⓢ
R109	ERD25TJ100	Carbon Resistor, 10Ω, ¼W	1	Ⓢ
R110	ERD25TJ221	Carbon Resistor, 220Ω, ¼W	1	Ⓢ
R111	ERD25TJ331	Carbon Resistor, 330Ω, ¼W	1	Ⓢ
R112	ERD25TJ680	Carbon Resistor, 68Ω, ¼W	1	Ⓢ
R113	ERD25TJ101	Carbon Resistor, 100Ω, ¼W	1	Ⓢ
R114	ERD25TJ222	Carbon Resistor, 2.2KΩ, ¼W	1	Ⓢ
R115	ERD25TJ103	Carbon Resistor, 10KΩ, ¼W	1	Ⓢ
R116	ERD25TJ682	Carbon Resistor, 6.8KΩ, ¼W	1	Ⓢ
R117	ERD25TJ332	Carbon Resistor, 3.3KΩ, ¼W	1	Ⓢ
R118	ERD25TJ224	Carbon Resistor, 220KΩ, ¼W	1	Ⓢ
R119	ERD25TJ470	Carbon Resistor, 47Ω, ¼W	1	Ⓢ
R120	ERD25TJ470	Carbon Resistor, 47Ω, ¼W	1	Ⓢ
R121	ERD25TJ222	Carbon Resistor, 2.2KΩ, ¼W	1	Ⓢ
R122	ERD25TJ222	Carbon Resistor, 2.2KΩ, ¼W	1	Ⓢ
R124	ERD25TJ331	Carbon Resistor, 330Ω, ¼W	1	Ⓢ
R125	ERD25TJ474	Carbon Resistor, 470KΩ, ¼W	1	Ⓢ
R126	ERD25TJ104	Carbon Resistor, 100KΩ, ¼W	1	Ⓢ
R128	ERD25TJ473	Carbon Resistor, 47KΩ, ¼W	1	Ⓢ
R129	ERD25TJ221	Carbon Resistor, 220Ω, ¼W	1	Ⓢ
R130	ERD25TJ222	Carbon Resistor, 2.2KΩ, ¼W	1	Ⓢ
R131	ERD25TJ153	Carbon Resistor, 15KΩ, ¼W	1	Ⓢ
R132	ERD25TJ680	Carbon Resistor, 68Ω, ¼W	1	Ⓢ
R133	ERD25TJ151	Carbon Resistor, 150Ω, ¼W	1	Ⓢ
R134	ERD25TJ684	Carbon Resistor, 680KΩ, ¼W	1	Ⓢ
R135	ERD25TJ684	Carbon Resistor, 680KΩ, ¼W	1	Ⓢ
R136	ERD25TJ684	Carbon Resistor, 680KΩ, ¼W	1	Ⓢ
R137	ERD25TJ103	Carbon Resistor, 10KΩ, ¼W	1	Ⓢ
R139	ERD25TJ103	Carbon Resistor, 10KΩ, ¼W	1	Ⓢ
R140	ERD25TJ103	Carbon Resistor, 10KΩ, ¼W	1	Ⓢ
R141	ERD25TJ333	Carbon Resistor, 33KΩ, ¼W	1	Ⓢ
R142	ERD25TJ474	Carbon Resistor, 470KΩ, ¼W	1	Ⓢ
R143	ERD25TJ104	Carbon Resistor, 100KΩ, ¼W	1	Ⓢ
R144	ERD25TJ222	Carbon Resistor, 2.2KΩ, ¼W	1	Ⓢ
R145	ERD25TJ155	Carbon Resistor, 1.5MΩ, ¼W	1	Ⓢ

3

Ref. No.	Part No.	Part Name & Description	Per Set	Remarks
R146	ERD25TJ103	Carbon Resistor, 10KΩ, ¼W	1	Ⓢ
R147	ERD25TJ152	Carbon Resistor, 1.5KΩ, ¼W	1	Ⓢ
R148	ERD25TJ471	Carbon Resistor, 470Ω, ¼W	1	Ⓢ
R149	ERD25TJ332	Carbon Resistor, 3.3KΩ, ¼W	1	Ⓢ
R150	ERD25TJ684	Carbon Resistor, 680KΩ, ¼W	1	Ⓢ
R151	ERD25TJ684	Carbon Resistor, 680KΩ, ¼W	1	Ⓢ
R152	ERD25TJ102	Carbon Resistor, 1KΩ, ¼W	1	Ⓢ
R153	ERD25TJ153	Carbon Resistor, 15KΩ, ¼W	1	Ⓢ
R155	ERD25TJ822	Carbon Resistor, 8.2KΩ, ¼W	1	Ⓢ
R156	ERD25TJ820	Carbon Resistor, 82Ω, ¼W	1	Ⓢ
R201	ERD25TJ473	Carbon Resistor, 47KΩ, ¼W	1	Ⓢ
R202	ERD25TJ473	Carbon Resistor, 47KΩ, ¼W	1	Ⓢ
R203	ERD25TJ102	Carbon Resistor, 1KΩ, ¼W	1	Ⓢ
R204	ERD25TJ102	Carbon Resistor, 1KΩ, ¼W	1	Ⓢ
R205	ERD25TJ104	Carbon Resistor, 100KΩ, ¼W	1	Ⓢ
R206	ERD25TJ104	Carbon Resistor, 100KΩ, ¼W	1	Ⓢ
R207	ERD25TJ103	Carbon Resistor, 10KΩ, ¼W	1	Ⓢ
R208	ERD25TJ103	Carbon Resistor, 10KΩ, ¼W	1	Ⓢ
R209	ERD25TJ681	Carbon Resistor, 680Ω, ¼W	1	Ⓢ
R210	ERD25TJ681	Carbon Resistor, 680Ω, ¼W	1	Ⓢ
R211	ERD25TJ334	Carbon Resistor, 330KΩ, ¼W	1	Ⓢ
R212	ERD25TJ334	Carbon Resistor, 330KΩ, ¼W	1	Ⓢ
R213	ERD25TJ154	Carbon Resistor, 150KΩ, ¼W	1	Ⓢ
R214	ERD25TJ154	Carbon Resistor, 150KΩ, ¼W	1	Ⓢ
R215	ERD25TJ102	Carbon Resistor, 1KΩ, ¼W	1	Ⓢ
R216	ERD25TJ102	Carbon Resistor, 1KΩ, ¼W	1	Ⓢ
R217	ERD25TJ103	Carbon Resistor, 10KΩ, ¼W	1	Ⓢ
R218	ERD25TJ103	Carbon Resistor, 10KΩ, ¼W	1	Ⓢ
R219	ERD25TJ682	Carbon Resistor, 6.8KΩ, ¼W	1	Ⓢ
R220	ERD25TJ682	Carbon Resistor, 6.8KΩ, ¼W	1	Ⓢ
R221	ERD25TJ154	Carbon Resistor, 150KΩ, ¼W	1	Ⓢ
R222	ERD25TJ154	Carbon Resistor, 150KΩ, ¼W	1	Ⓢ
R223	ERD25TJ684	Carbon Resistor, 680KΩ, ¼W	1	Ⓢ
R224	ERD25TJ684	Carbon Resistor, 680KΩ, ¼W	1	Ⓢ
R225	ERD25TJ102	Carbon Resistor, 1KΩ, ¼W	1	Ⓢ
R227	ERD25TJ684	Carbon Resistor, 680KΩ, ¼W	1	Ⓢ
R228	ERD25TJ684	Carbon Resistor, 680KΩ, ¼W	1	Ⓢ
R229	ERD25TJ103	Carbon Resistor, 10KΩ, ¼W	1	Ⓢ
R230	ERD25TJ103	Carbon Resistor, 10KΩ, ¼W	1	Ⓢ
R231	ERD25TJ562	Carbon Resistor, 5.6KΩ, ¼W	1	Ⓢ
R232	ERD25TJ562	Carbon Resistor, 5.6KΩ, ¼W	1	Ⓢ
R233	ERD25TJ223	Carbon Resistor, 22KΩ, ¼W	1	Ⓢ
R234	ERD25TJ223	Carbon Resistor, 22KΩ, ¼W	1	Ⓢ
R235	ERD25TJ183	Carbon Resistor, 18KΩ, ¼W	1	Ⓢ
R236	ERD25TJ183	Carbon Resistor, 18KΩ, ¼W	1	Ⓢ
R237	ERD25TJ183	Carbon Resistor, 18KΩ, ¼W	1	Ⓢ
R238	ERD25TJ183	Carbon Resistor, 18KΩ, ¼W	1	Ⓢ
R239	ERD25TJ473	Carbon Resistor, 47KΩ, ¼W	1	Ⓢ
R240	ERD25TJ473	Carbon Resistor, 47KΩ, ¼W	1	Ⓢ
R241	ERD25TJ103	Carbon Resistor, 10KΩ, ¼W	1	Ⓢ
R242	ERD25TJ103	Carbon Resistor, 10KΩ, ¼W	1	Ⓢ
R243	ERD25TJ222	Carbon Resistor, 2.2KΩ, ¼W	1	Ⓢ
R244	ERD25TJ222	Carbon Resistor, 2.2KΩ, ¼W	1	Ⓢ
R245	ERD25TJ103	Carbon Resistor, 10KΩ, ¼W	1	Ⓢ
R246	ERD25TJ103	Carbon Resistor, 10KΩ, ¼W	1	Ⓢ
R247	ERD25TJ103	Carbon Resistor, 10KΩ, ¼W	1	Ⓢ
R248	ERD25TJ103	Carbon Resistor, 10KΩ, ¼W	1	Ⓢ

4

RS-4360DFT

Ref. No.	Part No.	Part Name & Description	Per Set	Remarks
R249	ERD25TJ684	Carbon Resistor, 680KΩ, ¼W	1	Ⓢ
R250	ERD25TJ684	Carbon Resistor, 680KΩ, ¼W	1	Ⓢ
R251	ERD25TJ103	Carbon Resistor, 10KΩ, ¼W	1	Ⓢ
R252	ERD25TJ103	Carbon Resistor, 10KΩ, ¼W	1	Ⓢ
R253	ERD25TJ101	Carbon Resistor, 100Ω, ¼W	1	Ⓢ
R254	ERD25TJ101	Carbon Resistor, 100Ω, ¼W	1	Ⓢ
R255	ERD25TJ155	Carbon Resistor, 1.5MΩ, ¼W	1	Ⓢ
R256	ERD25TJ155	Carbon Resistor, 1.5MΩ, ¼W	1	Ⓢ
R257	ERD25TJ103	Carbon Resistor, 10KΩ, ¼W	1	Ⓢ
R258	ERD25TJ103	Carbon Resistor, 10KΩ, ¼W	1	Ⓢ
R259	ERD25TJ152	Carbon Resistor, 1.5KΩ, ¼W	1	Ⓢ
R260	ERD25TJ152	Carbon Resistor, 1.5KΩ, ¼W	1	Ⓢ
R261	ERD25TJ222	Carbon Resistor, 2.2KΩ, ¼W	1	Ⓢ
R262	ERD25TJ222	Carbon Resistor, 2.2KΩ, ¼W	1	Ⓢ
R263	ERD25TJ153	Carbon Resistor, 15KΩ, ¼W	1	Ⓢ
R264	ERD25TJ153	Carbon Resistor, 15KΩ, ¼W	1	Ⓢ
R265	ERD25TJ684	Carbon Resistor, 680KΩ, ¼W	1	Ⓢ
R266	ERD25TJ684	Carbon Resistor, 680KΩ, ¼W	1	Ⓢ
R267	ERD25TJ681	Carbon Resistor, 680Ω, ¼W	1	Ⓢ
R269	ERD25TJ222	Carbon Resistor, 2.2KΩ, ¼W	1	Ⓢ
R270	ERD25TJ222	Carbon Resistor, 2.2KΩ, ¼W	1	Ⓢ
R271	ERD25TJ222	Carbon Resistor, 2.2KΩ, ¼W	1	Ⓢ
R272	ERD25TJ222	Carbon Resistor, 2.2KΩ, ¼W	1	Ⓢ
R273	ERD25TJ153	Carbon Resistor, 15KΩ, ¼W	1	Ⓢ
R274	ERD25TJ153	Carbon Resistor, 15KΩ, ¼W	1	Ⓢ
R275	ERD25TJ681	Carbon Resistor, 680Ω, ¼W	1	Ⓢ
R276	ERD25TJ102	Carbon Resistor, 1KΩ, ¼W	1	Ⓢ
R277	ERD25TJ273	Carbon Resistor, 27KΩ, ¼W	1	Ⓢ
R278	ERD25TJ102	Carbon Resistor, 1KΩ, ¼W	1	Ⓢ
R279	ERD25TJ473	Carbon Resistor, 47KΩ, ¼W	1	Ⓢ
R280	ERD25TJ473	Carbon Resistor, 47KΩ, ¼W	1	Ⓢ
R281	ERD25TJ680	Carbon Resistor, 68Ω, ¼W	1	Ⓢ
R282	ERD25TJ680	Carbon Resistor, 68Ω, ¼W	1	Ⓢ
R283	ERD25TJ472	Carbon Resistor, 4.7KΩ, ¼W	1	Ⓢ
R284	ERD25TJ472	Carbon Resistor, 4.7KΩ, ¼W	1	Ⓢ
R285	ERD25TJ101	Carbon Resistor, 100Ω, ¼W	1	Ⓢ
R286	ERD25TJ100	Carbon Resistor, 10Ω, ¼W	1	Ⓢ
R287	ERD25TJ223	Carbon Resistor, 22KΩ, ¼W	1	Ⓢ
R288	ERD25TJ223	Carbon Resistor, 22KΩ, ¼W	1	Ⓢ
R289	ERD25TJ103	Carbon Resistor, 10KΩ, ¼W	1	Ⓢ
R290	ERD25TJ103	Carbon Resistor, 10KΩ, ¼W	1	Ⓢ
R301	ERD25TJ472	Carbon Resistor, 4.7KΩ, ¼W	1	Ⓢ
R302	ERD25TJ472	Carbon Resistor, 4.7KΩ, ¼W	1	Ⓢ
R303	ERD25TJ222	Carbon Resistor, 2.2KΩ, ¼W	1	Ⓢ
R304	ERD25TJ222	Carbon Resistor, 2.2KΩ, ¼W	1	Ⓢ
R305	ERD25TJ100	Carbon Resistor, 10Ω, ¼W	1	Ⓢ
R306	ERD25TJ100	Carbon Resistor, 10Ω, ¼W	1	Ⓢ
R307	ERD25TJ2R2	Carbon Resistor, 2.2Ω, ¼W	1	Ⓢ
R308	ERD25TJ683	Carbon Resistor, 68KΩ, ¼W	1	Ⓢ
R309	ERD25TJ683	Carbon Resistor, 68KΩ, ¼W	1	Ⓢ
R310	ERD25TJ472	Carbon Resistor, 4.7KΩ, ¼W	1	Ⓢ
R311	ERD25TJ223	Carbon Resistor, 22KΩ, ¼W	1	Ⓢ
R312	ERD25TJ154	Carbon Resistor, 150KΩ, ¼W	1	Ⓢ
R313	ERD25TJ154	Carbon Resistor, 150KΩ, ¼W	1	Ⓢ
R314	ERD25TJ822	Carbon Resistor, 8.2KΩ, ¼W	1	Ⓢ
R315	ERD25TJ822	Carbon Resistor, 8.2KΩ, ¼W	1	Ⓢ
R316	ERD25TJ103	Carbon Resistor, 10KΩ, ¼W	1	Ⓢ

Ref. No.	Part No.	Part Name & Description	Per Set	Remarks
R317	ERD25TJ103	Carbon Resistor, 10KΩ, ¼W	1	Ⓢ
R318	ERD25TJ103	Carbon Resistor, 10KΩ, ¼W	1	Ⓢ
R319	ERD25TJ103	Carbon Resistor, 10KΩ, ¼W	1	Ⓢ
R320	ERD25TJ684	Carbon Resistor, 680KΩ, ¼W	1	Ⓢ
R321	ERD25TJ684	Carbon Resistor, 680KΩ, ¼W	1	Ⓢ
R322	ERD25TJ331	Carbon Resistor, 330Ω, ¼W	1	Ⓢ
R323	ERD25TJ124	Carbon Resistor, 120KΩ, ¼W	1	Ⓢ
R324	ERD25TJ124	Carbon Resistor, 120KΩ, ¼W	1	Ⓢ
R325	ERD25TJ473	Carbon Resistor, 47KΩ, ¼W	1	Ⓢ
R326	ERD25TJ473	Carbon Resistor, 47KΩ, ¼W	1	Ⓢ
R327	ERD25TJ474	Carbon Resistor, 470KΩ, ¼W	1	Ⓢ
R328	ERD25TJ474	Carbon Resistor, 470KΩ, ¼W	1	Ⓢ
R329	ERD25TJ155	Carbon Resistor, 1.5MΩ, ¼W	1	Ⓢ
R330	ERD25TJ155	Carbon Resistor, 1.5MΩ, ¼W	1	Ⓢ
R331	ERD25TJ183	Carbon Resistor, 18KΩ, ¼W	1	Ⓢ
R332	ERD25TJ183	Carbon Resistor, 18KΩ, ¼W	1	Ⓢ
R333	ERD25TJ331	Carbon Resistor, 330Ω, ¼W	1	Ⓢ
R334	ERD25TJ331	Carbon Resistor, 330Ω, ¼W	1	Ⓢ
R335	ERD25TJ682	Carbon Resistor, 6.8KΩ, ¼W	1	Ⓢ
R336	ERD25TJ682	Carbon Resistor, 6.8KΩ, ¼W	1	Ⓢ
R337	ERD25TJ682	Carbon Resistor, 6.8KΩ, ¼W	1	Ⓢ
R338	ERD25TJ682	Carbon Resistor, 6.8KΩ, ¼W	1	Ⓢ
R339	ERD25TJ473	Carbon Resistor, 47KΩ, ¼W	1	Ⓢ
R340	ERD25TJ473	Carbon Resistor, 47KΩ, ¼W	1	Ⓢ
R341	ERD25TJ154	Carbon Resistor, 150KΩ, ¼W	1	Ⓢ
R342	ERD25TJ154	Carbon Resistor, 150KΩ, ¼W	1	Ⓢ
R343	ERD25TJ332	Carbon Resistor, 3.3KΩ, ¼W	1	Ⓢ
R344	ERD25TJ332	Carbon Resistor, 3.3KΩ, ¼W	1	Ⓢ
R345	ERD25TJ332	Carbon Resistor, 3.3KΩ, ¼W	1	Ⓢ
R346	ERD25TJ332	Carbon Resistor, 3.3KΩ, ¼W	1	Ⓢ
R347	ERD25TJ103	Carbon Resistor, 10KΩ, ¼W	1	Ⓢ
R348	ERD25TJ103	Carbon Resistor, 10KΩ, ¼W	1	Ⓢ
R349	ERD25TJ151	Carbon Resistor, 150Ω, ¼W	1	Ⓢ
R350	ERD25TJ151	Carbon Resistor, 150Ω, ¼W	1	Ⓢ
R353	ERD25TJ155	Carbon Resistor, 1.5MΩ, ¼W	1	
R354	ERD25TJ155	Carbon Resistor, 1.5MΩ, ¼W	1	
R355	ERD25TJ562	Carbon Resistor, 5.6KΩ, ¼W	1	Ⓢ
R356	ERD25TJ562	Carbon Resistor, 5.6KΩ, ¼W	1	Ⓢ
R357	ERD25TJ332	Carbon Resistor, 3.3KΩ, ¼W	1	Ⓢ
R358	ERD25TJ332	Carbon Resistor, 3.3KΩ, ¼W	1	Ⓢ
R361	ERD25TJ222	Carbon Resistor, 2.2KΩ, ¼W	1	Ⓢ
R362	ERD25TJ222	Carbon Resistor, 2.2KΩ, ¼W	1	Ⓢ
R363	ERD25TJ683	Carbon Resistor, 68KΩ, ¼W	1	Ⓢ
R364	ERD25TJ473	Carbon Resistor, 47KΩ, ¼W	1	Ⓢ
R365	ERD25TJ103	Carbon Resistor, 10KΩ, ¼W	1	Ⓢ
R366	ERD25TJ474	Carbon Resistor, 470KΩ, ¼W	1	Ⓢ
R367	ERD25TJ474	Carbon Resistor, 470KΩ, ¼W	1	Ⓢ
R368	ERD25TJ152	Carbon Resistor, 1.5KΩ, ¼W	1	Ⓢ
R369	ERD25TJ152	Carbon Resistor, 1.5KΩ, ¼W	1	Ⓢ
R370	ERD25TJ222	Carbon Resistor, 2.2KΩ, ¼W	1	Ⓢ
R371	ERD25TJ222	Carbon Resistor, 2.2KΩ, ¼W	1	Ⓢ
R372	ERD25TJ223	Carbon Resistor, 22KΩ, ¼W	1	Ⓢ
R373	ERD25TJ683	Carbon Resistor, 68KΩ, ¼W	1	Ⓢ
R374	ERD25TJ682	Carbon Resistor, 6.8KΩ, ¼W	1	Ⓢ
R375	ERD25TJ682	Carbon Resistor, 6.8KΩ, ¼W	1	Ⓢ
R376	ERD25TJ682	Carbon Resistor, 6.8KΩ, ¼W	1	Ⓢ
R377	ERD25TJ103	Carbon Resistor, 10KΩ, ¼W	1	Ⓢ

Ref. No.	Part No.	Part Name & Description	Per Set	Remarks
R378	ERD25TJ221	Carbon Resistor, 220Ω, ¼W	1	Ⓢ
R379	ERD25TJ682	Carbon Resistor, 6.8KΩ, ¼W	1	Ⓢ
R380	ERD25TJ682	Carbon Resistor, 6.8KΩ, ¼W	1	Ⓢ
R381	ERG2ANJ470	Metal Oxide Resistor, 47Ω, 2W	1	Ⓢ
R382	ERD25TJ272	Carbon Resistor, 2.7KΩ, ¼W	1	Ⓢ
R383	ERD25TJ223	Carbon Resistor, 22KΩ, ¼W	1	Ⓢ
R384	ERD25TJ222	Carbon Resistor, 2.2KΩ, ¼W	1	Ⓢ
R385	ERD25TJ220	Carbon Resistor, 22Ω, ¼W	1	Ⓢ
R386	ERD25TJ102	Carbon Resistor, 1KΩ, ¼W	1	Ⓢ
R387	ERD25TJ102	Carbon Resistor, 1KΩ, ¼W	1	Ⓢ
R388	ERD25TJ472	Carbon Resistor, 4.7KΩ, ¼W	1	Ⓢ
R389	ERD25TJ104	Carbon Resistor, 100KΩ, ¼W	1	Ⓢ
R390	ERD25TJ680	Carbon Resistor, 68Ω, ¼W	1	Ⓢ
R391	ERD25TJ103	Carbon Resistor, 10KΩ, ¼W	1	Ⓢ
R392	ERD25TJ473	Carbon Resistor, 47KΩ, ¼W	1	Ⓢ
R393	ERD25TJ473	Carbon Resistor, 47KΩ, ¼W	1	Ⓢ
R394	ERD25TJ101	Carbon Resistor, 100Ω, ¼W	1	Ⓢ
R395	ERD25TJ104	Carbon Resistor, 100KΩ, ¼W	1	Ⓢ
R396	ERD25TJ154	Carbon Resistor, 150KΩ, ¼W	1	Ⓢ
R397	ERD25TJ154	Carbon Resistor, 150KΩ, ¼W	1	Ⓢ
R398	ERD25TJ332	Carbon Resistor, 3.3KΩ, ¼W	1	Ⓢ
R399	ERD25TJ103	Carbon Resistor, 10KΩ, ¼W	1	Ⓢ
R400	ERD25TJ151	Carbon Resistor, 150Ω, ¼W	1	Ⓢ
R401	ERD25TJ103	Carbon Resistor, 10KΩ, ¼W	1	Ⓢ
R402	ERD25TJ102	Carbon Resistor, 1KΩ, ¼W	1	Ⓢ
R403	ERD25TJ333	Carbon Resistor, 33KΩ, ¼W	1	Ⓢ
R404	ERD25TJ103	Carbon Resistor, 10KΩ, ¼W	1	Ⓢ
R405	ERD25TJ680	Carbon Resistor, 68Ω, ¼W	1	Ⓢ
R406	ERD25TJ102	Carbon Resistor, 1KΩ, ¼W	1	Ⓢ
R407	ERD25TJ103	Carbon Resistor, 10KΩ, ¼W	1	Ⓢ
R408	ERD25TJ332	Carbon Resistor, 3.3KΩ, ¼W	1	Ⓢ
R412	ERD25TJ473	Carbon Resistor, 47KΩ, ¼W	1	Ⓢ
R415	ERD25TJ103	Carbon Resistor, 10KΩ, ¼W	1	Ⓢ
R417	ERD25TJ683	Carbon Resistor, 68KΩ, ¼W	1	Ⓢ
R418	ERD25TJ683	Carbon Resistor, 68KΩ, ¼W	1	Ⓢ
R427	ERD25TJ102	Carbon Resistor, 1KΩ, ¼W	1	Ⓢ
R430	ERD25TJ222	Carbon Resistor, 2.2KΩ, ¼W	1	Ⓢ
R431	ERD25TJ222	Carbon Resistor, 2.2KΩ, ¼W	1	Ⓢ
R432	ERD25TJ104	Carbon Resistor, 100KΩ, ¼W	1	Ⓢ
R433	ERD25TJ102	Carbon Resistor, 1KΩ, ¼W	1	Ⓢ
R435	ERD25TJ472	Carbon Resistor, 4.7KΩ, ¼W	1	Ⓢ
R436	ERD25TJ150	Carbon Resistor, 15Ω, ¼W	1	Ⓢ
R501	ERD25TJ222	Carbon Resistor, 2.2KΩ, ¼W	1	Ⓢ
R502	ERD25TJ222	Carbon Resistor, 2.2KΩ, ¼W	1	Ⓢ
R503	ERD25TJ102	Carbon Resistor, 1KΩ, ¼W	1	Ⓢ
R504	ERD25TJ102	Carbon Resistor, 1KΩ, ¼W	1	Ⓢ
R507	ERD25TJ103	Carbon Resistor, 10KΩ, ¼W	1	Ⓢ
R508	ERC14GK226	Solid Resistor, 22MΩ, ¼W	1	Ⓢ
R509	ERC14GK226	Solid Resistor, 22MΩ, ¼W	1	Ⓢ
		VARIABLE RESISTORS		
VR101	EVNM4AA00B53	Preset, Pilot Circuit, 5KΩ	1	
VR102	EVNM4AA00B13	Preset, Separation Control, 1KΩ	1	Ⓢ

Ref. No.	Part No.	Part Name & Description	Per Set	Remarks
VR103,104	RVV54A80	Volume, 50KΩ (A)	1	
VR105	EVLT4AA00B54	Preset, Meter Adjust, 50KΩ	1	Ⓢ
VR201,202	RVV14B82	Recording, 10KΩ (B)	2	
VR203,204, 205,206	RVV15B53	Tone, 100KΩ (B)	2	
VR207	RVV54G81	Balance, 50KΩ (G)	1	
VR208,304	EVNK4AA00B24	Preset, Meter & Erase Bias Adjust, 20KΩ	2	
VR303	EVNK4AA00B14	Preset, Erase Bias Adjust, 10KΩ	1	Ⓢ
VR301,302	EVNM4AA00B15	Preset, Recording Bias Adjust, 100KΩ	2	Ⓢ
VR501	EVLT4AA00B54	Preset, Bias Adjust, 50KΩ	1	Ⓢ
		CAPACITORS		
C1	ECKD1H102MD	Ceramic Capacitor, 0.001μF	1	
C2	ECEA50Y3R3	Electrolytic Capacitor, 3.3μF	1	Ⓢ
C3	ECEA50Y3R3	Electrolytic Capacitor, 3.3μF	1	Ⓢ
C101	ECCD1H390K	Ceramic Capacitor, 39PF	1	
C102	ECCD1H180K	Ceramic Capacitor, 18PF	1	
C103	ECCD1H010C	Ceramic Capacitor, 1PF	1	
C106	ECQS05102KZ	Polystylene Capacitor, 1000PF	1	
C107	ECCD1H101K	Ceramic Capacitor, 100PF	1	
C108	ECCD1H120K	Ceramic Capacitor, 12PF	1	
C109	ECKD1H223ZF	Ceramic Capacitor, 0.022μF	1	
C110	ECKD1H223ZF	Ceramic Capacitor, 0.022μF	1	
C111	ECCD1H100KC	Ceramic Capacitor, 10PF	1	
C112	ECKD1H102MD	Ceramic Capacitor, 0.001μF	1	
C113	ECKD1H102ZF	Ceramic Capacitor, 0.001μF	1	
C114	ECCD1H220KC	Ceramic Capacitor, 22PF	1	
C115	ECCD1H100KC	Ceramic Capacitor, 10PF	1	
C116	ECCD1H070D	Ceramic Capacitor, 7PF	1	
C117	ECCD1H020C	Ceramic Capacitor, 2PF	1	
C118	ECKD1H102MD	Ceramic Capacitor, 0.001μF	1	
C119	ECCD1H150KC	Ceramic Capacitor, 15PF	1	
C120	ECCD1H150KC	Ceramic Capacitor, 15PF	1	
C123	ECQS05821JZ	Polystylene Capacitor, 820PF	1	
C124	ECQS05332KZ	Polystylene Capacitor, 3300PF	1	
C125	ECQS05122KZ	Polystylene Capacitor, 1200PF	1	
C126	ECQS05391JZ	Polystylene Capacitor, 390PF	1	
C127	ECCD1H030C	Ceramic Capacitor, 3PF	1	
C128	ECCD1H150KV	Ceramic Capacitor, 15PF	1	
C129	ECCD1H010C	Ceramic Capacitor, 1PF	1	
C130	ECKD1H223ZF	Ceramic Capacitor, 0.022μF	1	
C131	ECEA1HS100	Electrolytic Capacitor, 10μF	1	Ⓢ
C132	ECCD1H070D	Ceramic Capacitor, 7PF	1	
C133	ECKD1H223ZF	Ceramic Capacitor, 0.022μF	1	
C134	ECEA1CS330	Electrolytic Capacitor, 33μF	1	Ⓢ
C135	ECKD1H223ZF	Ceramic Capacitor, 0.022μF	1	
C136	ECKD1H223ZF	Ceramic Capacitor, 0.022μF	1	
C137	ECCD1H560K	Ceramic Capacitor, 56PF	1	
C138	ECKD1H223ZF	Ceramic Capacitor, 0.022μF	1	
C139	ECKD1H682MD	Ceramic Capacitor, 0.0068μF	1	
C140	ECQS05152KZ	Polystylene Capacitor, 1500PF	1	
C141	ECEA1AS101	Electrolytic Capacitor, 100μF	1	Ⓢ
C142	ECEA1AS221	Electrolytic Capacitor, 220μF	1	Ⓢ
C143	ECKD1H103ZF	Ceramic Capacitor, 0.01μF	1	

Ref. No.	Part No.	Part Name & Description	Per Set		Remarks
C144	ECKD1H223ZF	Ceramic Capacitor, 0.022μF	1		
C145	ECEA50ZR22	Electrolytic Capacitor, 0.22μF	1		Ⓢ
C146	ECEA50ZR47	Electrolytic Capacitor, 0.47μF	1		Ⓢ
C147	ECEA1HS100	Electrolytic Capacitor, 10μF	1		Ⓢ
C148	ECKD1H103ZF	Ceramic Capacitor, 0.01μF	1		
C149	ECEA1JS4R7	Electrolytic Capacitor, 4.7μF	1		Ⓢ
C150	ECKD1H223ZF	Ceramic Capacitor, 0.022μF	1		
C151	ECEA1HS100	Electrolytic Capacitor, 10μF	1		Ⓢ
C152	ECFVD683MD	Semi-Conductor Capacitor, 0.068μF	1		
C153	ECFVD683MD	Semi-Conductor Capacitor, 0.068μF	1		
C154	ECEA1AS221	Electrolytic Capacitor, 220μF	1		Ⓢ
C155	ECFVD333MD	Semi-Conductor Capacitor, 0.033μF	1		
C156	ECFVD223MD	Semi-Conductor Capacitor, 0.022μF	1		
C157	ECKD1H223ZF	Ceramic Capacitor, 0.022μF	1		
C158	ECKD1H223ZF	Ceramic Capacitor, 0.022μF	1		
C159	ECEA1HS100	Electrolytic Capacitor, 10μF	1		Ⓢ
C160	ECEA1AS221	Electrolytic Capacitor, 220μF	1		Ⓢ
C161	ECKD1H223ZF	Ceramic Capacitor, 0.022μF	1		
C162	ECKD1H471KB	Ceramic Capacitor, 470PF	1		
C163	ECEA1AS101	Electrolytic Capacitor, 100μF	1		Ⓢ
C164	ECKD1H223ZF	Ceramic Capacitor, 0.022μF	1		
C165	ECKD1H223ZF	Ceramic Capacitor, 0.022μF	1		
C166	ECEA2AS010	Electrolytic Capacitor, 1μF	1		Ⓢ
C167	ECKD1H223ZF	Ceramic Capacitor, 0.022μF	1		
C168	ECEA50N1	Electrolytic Capacitor, 1μF	1		Ⓢ
C169	ECKD1H471KB	Ceramic Capacitor, 470PF	1		
C170	ECEA1JS4R7	Electrolytic Capacitor, 4.7μF	1		Ⓢ
C171	ECEA2AS010	Electrolytic Capacitor, 1μF	1		Ⓢ
C172	ECKD1H223ZF	Ceramic Capacitor, 0.022μF	1		
C173	ECKD1H223ZF	Ceramic Capacitor, 0.022μF	1		
C174	ECCD1H070D	Ceramic Capacitor, 7PF	1		
C176	ECCD1H100KC	Ceramic Capacitor, 10PF	1		
C177	ECKD1H223ZF	Ceramic Capacitor, 0.022μF	1		
C180	ECKD1H472MD	Ceramic Capacitor, 0.0047μF	1		
C182	ECCD1H050CC	Ceramic Capacitor, 5PF	1		
C201	ECEA2AS010	Electrolytic Capacitor, 1μF	1		Ⓢ
C202	ECEA2AS010	Electrolytic Capacitor, 1μF	1		Ⓢ
C203	ECCD1H101K	Ceramic Capacitor, 100PF	1		
C204	ECCD1H101K	Ceramic Capacitor, 100PF	1		
C205	ECEA1AS470	Electrolytic Capacitor, 47μF	1		Ⓢ
C206	ECEA1AS470	Electrolytic Capacitor, 47μF	1		Ⓢ
C207	ECKD1H103MD	Ceramic Capacitor, 0.01μF	1		
C208	ECKD1H103MD	Ceramic Capacitor, 0.01μF	1		
C209	ECFVD333MD	Semi-Conductor Capacitor, 0.033μF	1		
C210	ECFVD333MD	Semi-Conductor Capacitor, 0.033μF	1		
C211	ECEA1ES101	Electrolytic Capacitor, 100μF	1		Ⓢ
C213	ECKD1H333ZF	Ceramic Capacitor, 0.033μF	1		
C214	ECKD1H333ZF	Ceramic Capacitor, 0.033μF	1		
C215	ECKD1H333ZF	Ceramic Capacitor, 0.033μF	1		
C216	ECKD1H333ZF	Ceramic Capacitor, 0.033μF	1		
C217	ECKD1H102ZF	Ceramic Capacitor, 0.001μF	1		
C218	ECKD1H102ZF	Ceramic Capacitor, 0.001μF	1		
C219	ECEA1HS100	Electrolytic Capacitor, 10μF	1		Ⓢ
C220	ECEA1HS100	Electrolytic Capacitor, 10μF	1		Ⓢ
C221	ECEA2AS010	Electrolytic Capacitor, 1μF	1		Ⓢ
C222	ECEA2AS010	Electrolytic Capacitor, 1μF	1		Ⓢ
C223	ECKD1H472MD	Ceramic Capacitor, 0.0047μF	1		

Ref. No.	Part No.	Part Name & Description	Per Set		Remarks
C224	ECKD1H472MD	Ceramic Capacitor, 0.0047μF	1		
C225	ECFVD333MD	Semi-Conductor Capacitor, 0.033μF	1		
C226	ECFVD333MD	Semi-Conductor Capacitor, 0.033μF	1		
C227	ECFVD333MD	Semi-Conductor Capacitor, 0.033μF	1		
C228	ECFVD333MD	Semi-Conductor Capacitor, 0.033μF	1		
C229	ECKD1H222MD	Ceramic Capacitor, 0.0022μF	1		
C230	ECKD1H222MD	Ceramic Capacitor, 0.0022μF	1		
C231	ECEA2AS010	Electrolytic Capacitor, 1μF	1		Ⓢ
C232	ECEA2AS010	Electrolytic Capacitor, 1μF	1		Ⓢ
C233	ECEA2AS010	Electrolytic Capacitor, 1μF	1		Ⓢ
C234	ECEA2AS010	Electrolytic Capacitor, 1μF	1		Ⓢ
C235	ECKD1H223ZF	Ceramic Capacitor, 0.022μF	1		
C236	ECKD1H223ZF	Ceramic Capacitor, 0.022μF	1		
C237	ECKD1H472MD	Ceramic Capacitor, 0.0047μF	1		
C238	ECKD1H472MD	Ceramic Capacitor, 0.0047μF	1		
C239	ECFVD473MD	Semi-Conductor Capacitor, 0.047μF	1		
C240	ECFVD473MD	Semi-Conductor Capacitor, 0.47μF	1		
C241	ECEA1CS102	Electrolytic Capacitor, 1000μF	1		Ⓢ
C243	ECEA2AS010	Electrolytic Capacitor, 1μF	1		Ⓢ
C244	ECEA2AS010	Electrolytic Capacitor, 1μF	1		Ⓢ
C245	ECKD1H152MD	Ceramic Capacitor, 0.0015μF	1		
C246	ECKD1H152MD	Ceramic Capacitor, 0.0015μF	1		
C247	ECEA1AS101	Electrolytic Capacitor, 100μF	1		Ⓢ
C248	ECEA1ES471	Electrolytic Capacitor, 470μF	1		Ⓢ
C249	ECEA1AS101	Electrolytic Capacitor, 100μF	1		Ⓢ
C250	ECEA2AS010	Electrolytic Capacitor, 1μF	1		Ⓢ
C251	ECEA1AS221	Electrolytic Capacitor, 220μF	1		Ⓢ
C252	ECEA1CS332	Electrolytic Capacitor, 3300μF	1		Ⓢ
C253	ECCD1H101K	Ceramic Capacitor, 100PF	1		
C254	ECCD1H101K	Ceramic Capacitor, 100PF	1		
C255	ECEA1AS101	Electrolytic Capacitor, 100μF	1		Ⓢ
C257	ECEA50ZR47	Electrolytic Capacitor, 0.47μF	1		Ⓢ
C258	ECEA50ZR47	Electrolytic Capacitor, 0.47μF	1		Ⓢ
C259	ECEA1CS330	Electrolytic Capacitor, 33μF	1		Ⓢ
C260	ECEA1CS330	Electrolytic Capacitor, 33μF	1		Ⓢ
C261	ECCD1H470K	Ceramic Capacitor, 47PF	1		
C262	ECCD1H470K	Ceramic Capacitor, 47PF	1		
C263	ECEA1AS470	Electrolytic Capacitor, 47μF	1		Ⓢ
C264	ECEA1AS470	Electrolytic Capacitor, 47μF	1		Ⓢ
C265	ECQG05224MZ	Polystylene Capacitor, 0.22μF	1		
C266	ECQG05224MZ	Polystylene Capacitor, 0.22μF	1		
C267	ECEA1CS221	Electrolytic Capacitor, 220μF	1		Ⓢ
C269	ECEA1AS102	Electrolytic Capacitor, 1000μF	1		Ⓢ
C270	ECEA1AS102	Electrolytic Capacitor, 1000μF	1		Ⓢ
C271	ECKD1H471KB	Ceramic Capacitor, 470PF	1		
C272	ECKD1H471KB	Ceramic Capacitor, 470PF	1		
C273	ECEA1HS100	Electrolytic Capacitor, 10μF	1		Ⓢ
C274	ECKD1H103ZF	Ceramic Capacitor, 0.01μF	1		
C277	ECEA50ZR1	Electrolytic Capacitor, 0.1μF	1		Ⓢ
C278	ECEA50ZR1	Electrolytic Capacitor, 0.1μF	1		Ⓢ
C380	ECFVD683MD	Semi-Conductor Capacitor, 0.068μF	1		
C302	ECFVD683MD	Semi-Conductor Capacitor, 0.068μF	1		
C303	ECFVD223MD	Semi-Conductor Capacitor, 0.022μF	1		
C304	ECFVD223MD	Semi-Conductor Capacitor, 0.022μF	1		
C305	ECCD1H470K	Ceramic Capacitor, 47PF	1		
C306	ECCD1H470K	Ceramic Capacitor, 47PF	1		
C307	ECEA1AS101	Electrolytic Capacitor, 100μF	1		Ⓢ

Ref. No.	Part No.	Part Name & Description	Per Set	Remarks
C308	ECEA1CS330	Electrolytic Capacitor, 33μF	1	Ⓢ
C309	ECKD1H681KB	Ceramic Capacitor, 680PF	1	
C310	ECKD1H681KB	Ceramic Capacitor, 680PF	1	
C311	ECEA1HS100	Electrolytic Capacitor, 10μF	1	Ⓢ
C312	ECEA1HS100	Electrolytic Capacitor, 10μF	1	Ⓢ
C313	ECKD1H102MD	Ceramic Capacitor, 0.001μF	1	
C314	ECKD1H102MD	Ceramic Capacitor, 0.001μF	1	
C315	ECCD1H470K	Ceramic Capacitor, 47PF	1	
C316	ECCD1H470K	Ceramic Capacitor, 47PF	1	
C317	ECKD1H102MD	Ceramic Capacitor, 0.001μF	1	
C318	ECKD1H102MD	Ceramic Capacitor, 0.001μF	1	
C319	ECKD1H102MD	Ceramic Capacitor, 0.001μF	1	
C320	ECKD1H102MD	Ceramic Capacitor, 0.001μF	1	
C321	ECFVD153MD	Semi-Conductor Capacitor, 0.015μF	1	
C322	ECFVD153MD	Semi-Conductor Capacitor, 0.015μF	1	
C323	ECEA1ES470	Electrolytic Capacitor, 47μF	1	Ⓢ
C324	ECEA1ES470	Electrolytic Capacitor, 47μF	1	Ⓢ
C325	ECKD1H102MD	Ceramic Capacitor, 0.001μF	1	
C326	ECKD1H102MD	Ceramic Capacitor, 0.001μF	1	
C327	ECCD1H101K	Ceramic Capacitor, 100PF	1	
C328	ECCD1H101K	Ceramic Capacitor, 100PF	1	
C329	ECEA1ES101	Electrolytic Capacitor, 100μF	1	Ⓢ
C330	ECEA1AS101	Electrolytic Capacitor, 100μF	1	Ⓢ
C331	ECEA2AS010	Electrolytic Capacitor, 1μF	1	Ⓢ
C332	ECEA2AS010	Electrolytic Capacitor, 1μF	1	Ⓢ
C333	ECEA1JS4R7	Electrolytic Capacitor, 4.7μF	1	Ⓢ
C334	ECEA1JS4R7	Electrolytic Capacitor, 4.7μF	1	Ⓢ
C335	ECKD1H332MD	Ceramic Capacitor, 0.0033μF	1	
C336	ECKD1H332MD	Ceramic Capacitor, 0.0033μF	1	
C337	ECEA50ZR22	Electrolytic Capacitor, 0.22μF	1	Ⓢ
C338	ECEA50ZR22	Electrolytic Capacitor, 0.22μF	1	Ⓢ
C339	ECKD1H682MD	Ceramic Capacitor, 0.0068μF	1	
C340	ECKD1H682MD	Ceramic Capacitor, 0.0068μF	1	
C341	ECQG05822KZ	Polystylene Capacitor, 0.0082μF	1	
C342	ECQG05822KZ	Polystylene Capacitor, 0.0082μF	1	
C343	ECEA1HS100	Electrolytic Capacitor, 10μF	1	Ⓢ
C344	ECEA1HS100	Electrolytic Capacitor, 10μF	1	Ⓢ
C345	ECEA2AS010	Electrolytic Capacitor, 1μF	1	Ⓢ
C346	ECEA2AS010	Electrolytic Capacitor, 1μF	1	Ⓢ
C347	ECCD1H101K	Ceramic Capacitor, 100PF	1	
C348	ECCD1H101K	Ceramic Capacitor, 100PF	1	
C349	ECEA2AS010	Electrolytic Capacitor, 1μF	1	Ⓢ
C350	ECEA2AS010	Electrolytic Capacitor, 1μF	1	Ⓢ
C351	ECEA2AS010	Electrolytic Capacitor, 1μF	1	Ⓢ
C352	ECEA2AS010	Electrolytic Capacitor, 1μF	1	Ⓢ
C353	ECEA1HS100	Electrolytic Capacitor, 10μF	1	Ⓢ
C354	ECEA1HS100	Electrolytic Capacitor, 10μF	1	Ⓢ
C355	ECEA1ES101	Electrolytic Capacitor, 100μF	1	Ⓢ
C356	ECQS1103KZ	Polystylene Capacitor, 0.01μF	1	
C357	ECEA1CS221	Electrolytic Capacitor, 220μF	1	Ⓢ
C358	ECQG05682MZ	Polystylene Capacitor, 0.0068μF	1	
C359	ECQG05473MZ	Polystylene Capacitor, 0.047μF	1	
C360	ECEA1ES470	Electrolytic Capacitor, 47μF	1	Ⓢ
C361	ECEA1ES470	Electrolytic Capacitor, 47μF	1	Ⓢ
C362	ECEA2AS010	Electrolytic Capacitor, 1μF	1	Ⓢ
C363	ECEA1CS221	Electrolytic Capacitor, 220μF	1	Ⓢ
C364	ECKD1H102MD	Ceramic Capacitor, 0.001μF	1	

Ref. No.	Part No.	Part Name & Description	Per Set	Remarks
C365	ECCD1H101K	Ceramic Capacitor, 100PF	1	
C366	ECEA50ZR22	Electrolytic Capacitor, 0.22μF	1	Ⓢ
C367	ECEA2AS010	Electrolytic Capacitor, 1μF	1	Ⓢ
C368	ECEA1CS330	Electrolytic Capacitor, 33μF	1	Ⓢ
C369	ECEA2AS2R2	Electrolytic Capacitor, 2.2μF	1	Ⓢ
C370	ECEA1HS100	Electrolytic Capacitor, 10μF	1	Ⓢ
C371	ECEA1AS101	Electrolytic Capacitor, 100μF	1	Ⓢ
C372	ECEA1ES101	Electrolytic Capacitor, 100μF	1	Ⓢ
C373	ECEA2AS010	Electrolytic Capacitor, 1μF	1	Ⓢ
C374	ECEA2AS010	Electrolytic Capacitor, 1μF	1	Ⓢ
C375	ECKD1H103ZF	Ceramic Capacitor, 0.01μF	1	
C380	ECEA1CS221	Electrolytic Capacitor, 220μF	1	Ⓢ
C381	ECEA1HS100	Electrolytic Capacitor, 10μF	1	Ⓢ
C382	ECEA1HS100	Electrolytic Capacitor, 10μF	1	Ⓢ
C383	ECEA1HS010	Electrolytic Capacitor, 1μF	1	Ⓢ
C385	ECEA1ES101	Electrolytic Capacitor, 100μF	1	Ⓢ
C501	ECKD1H103ZF	Ceramic Capacitor, 0.01μF	1	
C502	ECKD1H103ZF	Ceramic Capacitor, 0.01μF	1	
C503	ECKD1H103ZF	Ceramic Capacitor, 0.01μF	1	
C504	ECKD1H103ZF	Ceramic Capacitor, 0.01μF	1	
VARIABLE CAPACITORS				
CV101,102, 103,104, 105	RCVCV55J139	Tuning Capacitor, W/Trimmer Capacitor (CT101,102)	1	
CT103,104, 105,106, 108,109, 110,111	RCV1PX10AGS	Trimmer Capacitor	8	
CT107	RCV1PX20AGS	Trimmer Capacitor	1	
CERAMIC FILTERS				
CF101,102	RVFCF1M12FR	Ceramic Filter	2	
CF103	RVFSFZ455B	Ceramic Filter	1	
TRANSISTORS				
TR101	2SK49	Transistor	1	
TR102,103	2SC1675	Transistor	2	
TR104,201, 202,203, 204,205, 206,207, 208,209, 210,303, 304,307, 308	2SC945	Transistor	15	
TR211,321	2SD592	Transistor	2	

Ref. No.	Part No.	Part Name & Description	Per Set		Remarks
TR105,106, 301,302, 305,306, 311,312, 316,318, 319,322	2SC828	Transistor	12		
TR212	2SC2001	Transistor	1		
TR313,317, 320	2SA564	Transistor	3		
TR314	2SC1383	Transistor	1		
TR315	2SB621	Transistor	1		
TR326	2SC1568	Transistor	1		
INTEGRATED CIRCUITS					
IC101	AN7210	IC	1		
IC102	AN7211	IC	1		
IC103	RVILA3350A	IC	1		
IC201	AN7145M	IC (Si)	1		
IC301,302	RVITA7137PST	IC (Si)	2		
IC303	RVIUPC566H3	IC	1		
DIODES					
D1,2,309,310, 506,507,508 509,314	SM112	Diode	9		Ⓢ
D3,4,103,104, 105	MA161	Diode	5		Ⓢ
D101,102,301 302,303,304 305,306	OA90M	Diode	8		Ⓢ
D201	RVDRD7R5FB	Diode	1		Ⓢ
D307,308	RVDKB262D	Diode	2		
D501,502,503 504,505	RVDGL31AR	Diode	5		Ⓢ
D313	RVDRD12FB	Diode	1		
THERMISTORS					
TH101	RRT103	Thermistor	1		
TH301	RRT251	Thermistor	1		
TRANSFORMERS					
T1	RLT5W23	Power Transformer	1		○ S
T101,104	RLI4M101	FM IFT	2		Ⓢ
T102	RLI2M213	AM IFT	1		
T103	RLI2M205	AM IFT	1		Ⓢ
COILS					
L2	RLF5F86	Antenna Coil	1		
L101	SLA4N2	Antenna Coil, FM	1		

Ref. No.	Part No.	Part Name & Description	Per Set		Remarks
L102	SLD4N30	Tuning Coil, FM	1		
L103	SLO4N12	Oscillator Coil, FM	1		
L104,114,306	RLQY30S1	Trap Coil, FM	3		
L105	RLA3M25	Antenna Coil, SW2	1		
L106,110	RLA3M41	Antenna, Oscillator Coil	2		
L107	RLO2M14	Oscillator Coil, MW	1		
L108	RLO3M32	Oscillator Coil, SW1	1		
L111,202,203 204,205	RLQY11G4	Trap Coil, MW	5		
L112	RLQY1003	Choke Coil	1		
L109	RLO3M58	Oscillator Coil, SW2	1		
L113,303,304	RLM1X1	Trap Coil	1		
L301,302	RLE5004	Trap Coil	2		
L305	RLO9C19	Oscillator Coil	1		
COMPONENT COMBINATIONS					
Z101,102	EXEM675F	Component Combination	2		
SWITCHES					
S1-1~S1-10	RWSS4360FTX	Slide Switch Assembly, Band Selector	1		
S2-1,S2-2	RST51V	Lever Switch, FM Mode/Muting	1		
S3	RSH75Z	Leaf Switch, AM Muting	1		
S4-1~S4-3 S6-1~S6-3	RST53W	Lever Switch, Selector, Mode	2		
S5-1~S5-6	RST3F01Z	Lever Switch, Power	1		
S7	RSH2A03Z	Micro Switch, Power	1		
S8-1~S8-12	RSH2L01Z	Side Switch, Recording-Play	1		
S9-1~S9-3 S10-1~S10-4	RSH2D01Z	Side Switch, Auto-Manual, EQ	2		
S11,S12	RSH2B03Z	Slide Switch, Bias, Loudness	2		
S13	RSH2B03Y	Slide Switch, Light	1		
S14-1~S14-6	RSHX007Z	Slide Switch, MPS/OFF/Memory	1		
S15-1,S15-2	RST51W	Lever Switch, Edit	1		
S16	RFA1Z	Leaf Switch, Solenoide Time Limit	1		
S17	RFA2Z	Leaf Switch, Rewind on	1		
S18	RFA3Z	Leaf Switch, Tape Power	1		
S19	RFA5Z	Leaf Switch, FF, Rewind on	1		
S20	RFA4Z	Leaf Switch, Play on	1		
S21	(Refer to M42)	Counter Switch (Inclued in Counter)			
S22	(Refer to E26)	MPS Switch (Inclued in Plunger Assembly)			
S23	RSR4A01X	Voltage Select Switch	1		S
S24	(Refer to J12)	AC/DC Select Switch	1		
JACKS					
J1~3	RYE1S4360DFT	Jack Assembly, Phono In, Line IN, Line Out,	1		○
J4,5	QJA0153	Jack, Mic	2		
J6	QJA0156	Jack, Remote	1		
J7	RJS139Z	Jack, Rec/PB	1		
J8,9	RJJ10C	Jack, EXT SP	2		
J10	RJJ109Z	Jack, Headphone	1		Ⓢ

Ref. No.	Part No.	Part Name & Description	Per Set		Remarks
J12	RJJ29Z	Jack,AC IN	1		S
		ELECTRICAL PARTS			
E1	RJH29Z	Head,Record/Playback	1		
E2	RJH7E1Z	Head,Erase	1		○
E3	RSM1517Z	Meter,VU	2		
E4	RSM1517Y	Meter,Tuning	1		
E5	EAS16P33GX	Speaker,Woofer	2		○
E6	EAS3KH02SA	Speaker,Tweeter	2		
E7	XAMR58T200	Pilot Lamp,12V 40mA	2		
E8	XAMR58T250	Pilot Lamp,12V 40mA	1		
E9	RJS253Y-X	Socket,3P Connector	17		
E10	RJS216Y-X	Socket,4P Connector	5		
E11	RJS217Y-X	Socket,5P Connector	2		
E12	RJS112Y-X	Socket,6P Connector	8		
E13	RJS219Y-X	Socket,7P Connector	1		
E14	RJT462Z-X	Terminal,Socket	150		
E15	RBC141Z	Button,EDIT,RECORD,FF & etc.	8		
E16	RME178Z	Bracket,Chassis	1		
E17	SDD46K	Drum,Dial	1		
E18	RDR20-3	Pulley,Dial	3		
E19	RDR23-1	Pulley,Dial	2		
E20	RDS4090A	Spring,Dial	1		
E21	RDZ05A	Cord(170cm),Dial	1Roll		
E22	RDT9095Z	Shaft,Tuning	1		
E23	RKE257Y	Jack Board,DC IN,AC IN	1		
E24	RZQ1S4360FTX	Cassette Slot Assembly	1		
E25	RZQ2S4360FTX	Piston Cover Assembly	1		
E26	RSG11Y	Plunger Assembly	1		
E27	RUS341Z	Lever,Recording Switch	1		
E28	RUV497Z	Cover,Tape Motor	1		
E29	RDF227Z	Shaft,Cassette Slot	8		
E30	RDS5260Z	Spring,Cassette Slot	1		
E31	RDS5490Z	Spring,Piston	1		
E32	RHP567Z	Sheet,Cassette Slot	1		
E33	RHR1016Z	Piston,Cassette Slot	1		
E34	RHR891Z	Sheet,Piston	1		
E35	RHG471Z	Rubber,Piston	1		
E36	RHG101A	Rubber Cushion,Core Antenna	2		
E37	XSN2+10	Screw,Micro Switch M'tg	2		
E38	XSN2+W4	Screw,Recording Lever M'tg	2		
E39	XSN2+6	Screw,DC IN Jack M'tg	2		
E40	XYN3+F8RS	Red Screw,PC Board M'tg	1		
E41	XYN3+F8S	Screw,Tape Deck M'tg	3		
E42	XYNR4+H10S	Screw,Power Transformer M'tg	4		
E43	XTN3+10C	Screw,Tweeter M'tg	4		
E44	XTN26+5F	Screw,EDIT Switch & Plunger M'tg	4		
E45	XTW3+12F	Screw,Jack Board & Woofer M'tg	8		
E46	XTW3+10FR	Red Screw,Chassis & PC Board M'tg	7		
E47	XTW3+6L	Screw,Tape Deck M'tg	2		
E48	XTW3+6LR	Red Screw,PC Board M'tg	4		
E49	XNS8	Nut,Band Switch,Volume & etc. M'tg	7		
E50	XUC25FW	Circlip,Cassette Slot	8		
E51	RDG5510Z	Cam,Leaf Switch	1		
E52	RJP137Z	Plug,3P Connector	17		

Ref. No.	Part No.	Part Name & Description	Per Set		Remarks
E53	RJP107Z	Plug,4P Connector	5		
E54	RJP116Z	Plug,5P Connector	2		
E55	RJP142Z	Plug,6P Connector	8		
E56	RJP119Z	Plug,7P Connector	1		
E57	XANR2T20	Neon Lamp	1		
E58	RMW151Y	Angle, Micro Switch	1		○
E59	RUV407	Cover,Power,Selector,Mode	3		○
E60	RMA165Z	Holder,Bar Antenna	1		○
E61	RMD3056Y	Lever,Cassette Slot (L)	1		○
E62	RMD3056Z	Lever,Cassette Slot (R)	1		○
E63	RDF227Z	Shaft,Cassette Slot	2		○
E64	RMW152Z	Bracket,Eject Switch	1		○
E65	RNW150-2	Washer	6		
E66	RHG211	Rubber,Pilot Lamp	1		○
E67	RHM90Z	Spacer,Motor	1		○
E68	RMY62Y	Heat Sink	1		○
E69	RUV114A	Cover,Tape Counter	1		○
		CABINET PARTS			
G1	RYMS3460DFTX	Cabinet Assembly	1		○
G2	RYFS4360DFTX	Cabinet Cover Assembly	1		○
G2-1	RJC111A	Terminal,Battery ⊕ Side	2		
G2-2	RJC505Z	Terminal Spring,Battery ⊖ Side	2		
G2-3	RJT398A	Connecting Pipe,Terminal Spring	2		
G2-4	RJC915Z	Terminal,Battery ⊕ ⊖ Side	2		
G3	RKH88Z	Handle,Cabinet	1		
G4	RKX130Z	Arm,Handle	2		
G5	XSB3+6BNS	Screw,Handle M'tg	4		
G6	XYN3+C6S	Screw,Arm M'tg	2		
G7	XWG3F10	Washer,Arm M'tg	2		
G8	RHM58Z	Washer,Arm M'tg	2		
G9	RNW824Z	Washer,Arm M'tg	6		
G10	RMD3014AS	Bracket,Tape Deck	1		
G11	RYKS4360FTX	Cassette Lid Assembly	1		○
G12	RYE2S4360DFT	Microphone Rest Assembly	2		○
G13	RYGS4360DFTX	Microphone Grille Assembly	2		○
G14	XEARS158HAY	Telescopic Antenna,9 steps,1218mm	2		
G15	SJF4206	Terminal,EXT.Antenna	2		
G16	RUS344Z	Spring,Microphone Grille	2		
G17	RMD2030Y	Bracket,Microphone	2		○
G18	RDF902B	Shaft,Microphone Grille	2		
G19	RHG483Z	Rubber Holder,Microphone	2		○
G20	XUC15FW	Circlip,Microphone Grille	2		
G21	RUS345Z	Holder,Microphone Rest	2		
G22	RDP186Z	Pointer,Dial	1		
G23	RBC140Z	Button,LIGHT,LOUDNESS & etc.	5		
G24	RUS272Z	Spring,Button	5		
G25	SBN555-2	Knob,TONE & BAND	3		
G26	RBN447Z	Knob,VOLUME	1		
G27	RBN466Z	Knob,TUNING	1		
G28	RBN431Y	Knob,REC LEVEL & BALANCE	3		
G29	RBS111Z	Button,MPS	1		
G30	RBE15Z	Knob,SELECTOR,MODE & FM MODE	3		

Ref. No.	Part No.	Part Name & Description	Per Set		Remarks
G31	RBE15Y	Knob,POWER	1		
G32	RHM83Z	Nut,Headphone Jack M'tg	1		
G33	RHG324Z	Rubber Leg,Cabinet	2		
G34	XTW3+16LFZ	Screw,Cabinet Cover M'tg	3		
G35	XTN4+50B	Screw,Cabinet Cover M'tg	6		
G36	RJM141Z	Condenser Microphone	2		○
G37	RKK138Z	Cover,Battery Compartment	1		○
G38	RMA89A	Bracket,Telescopic Antenna	2		○
G39	RMD3062Y	Bracket,Microphone	2		○
G40	RHG481Z	Rubber,Microphone	2		○
G41	RHM100Z	Spacer,Microphone	2		○
G42	RKK150Z	Cover, Accessory	1		○
		ACCESSORIES			
A1	RJN19Z	Cassette Tape	1		
A2	RJA21Z	Power Cord,AC	1		S
A3	RJP120Z	Plug,AC Cord	1		S
A4	WMEO-300bY	Lead Wire,Antenna	1		
A5	WMEG-50bY	Lead Wire,Earth	1		
A6	RQX6352Z	Instruction Book	1		○
		PACKINGS			
P1	RPP254Z	Polyethylene Cover	1		
	RPN9268Z	Pad Complete	1		○
P2	(Not Available, Order RPN9268Z)	Pad,Upper Side	(1)		
		Pad,Lower Side	(1)		
P3	RPK699Z	Gift Box	1		○